WELDING PROCEDURES

WELD	PROCESS	POSITION	SPECIAL INSTRUCTIONS

LINCOLN® ELECTRIC

TOP VIEW

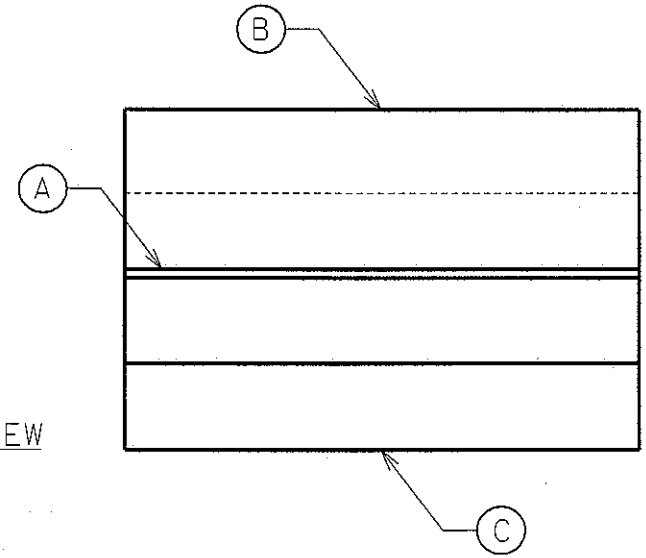

FRONT VIEW

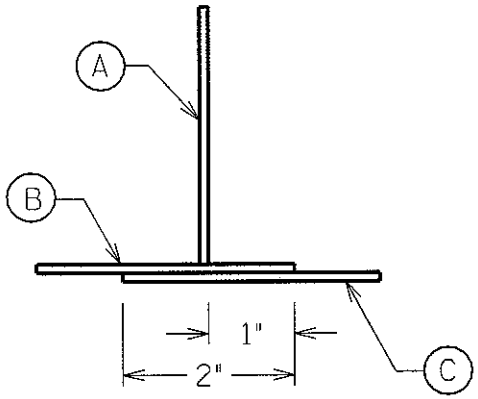

SIDE VIEW

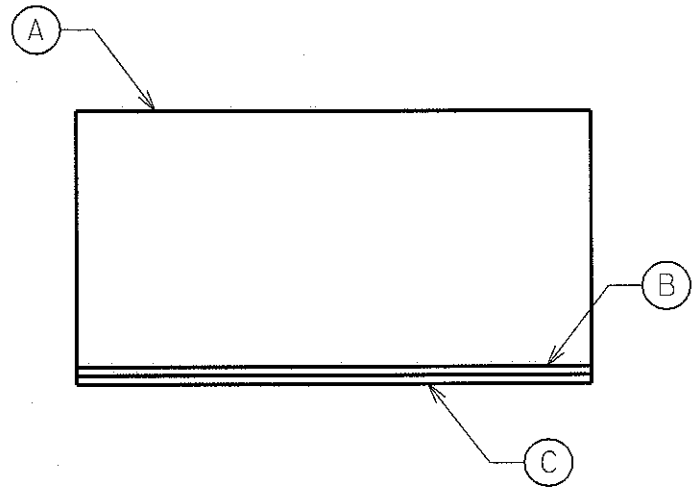

PART NO.	Qty.	DESCRIPTION
C	1	3" x 6" x 10ga ALUMINUM PLATE
B	1	3" x 6" x 10ga ALUMINUM PLATE
A	1	3" x 6" x 10ga ALUMINUM PLATE

BILL OF MATERIAL

FOR REFERENCE FILES PLEASE USE SHEETS:
SW-2012-004

M:\PLANTENGR\PEDWG\ 2000\ 2012S005.DGN

ITEMS	QTY	MATERIAL

MACH

STATE SKILLS U.S.A.

ALUMINUM ASSEMBLY

DRAWN	J. SCHMIDT	DATE 3/1/06	SCALE NOTED
CHK'D	O.K.	SW- 2012-005	B
MACH NO.	LOC.		