ORDER NO. 502

TOOL SHARPENING GAGE

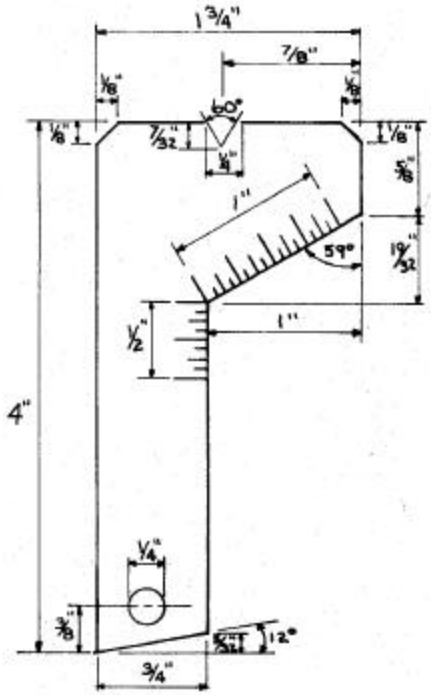

Gage can be used to measure:

1. Cold chisel cutting angle
2. Twist drill, cutting edge
3. Twist drill, lip clearance

Bill of Material:

1-7/8" x 4-1/16" x 3/32"
aluminum or brass
(aluminum is easier to work)

Name_____

Date_____

Grade_____

Construction procedure:

1. Square one corner of aluminum or brass stock.
2. Measure and scribe outline on stock with awl.
3. Mark graduations with awl.
4. Cut out tool gage with hacksaw. (Use protective blocks on each side when cutting in vise.)
5. Dress to the lines with file, bevel corners.
6. Use three-square file to cut chisel vee.
7. Polish with steel wool.
8. Submit to instructor for evaluation.
9. Drill size holes 1/4", 3/16", 1/8", and 1/6" may be drilled in the body of the gage.

Questions:

1. Why is aluminum easier to work than brass?
2. Why is it important to square or make a corner 90°?
3. Which hacksaw blade did you use; 18-24-32? Why?
4. When should you use draw filing? Cross filing?
5. Why should files always be fitted with handles.

Evaluation score sheet:

	Item	Points Possible	Points Earned
1.	Length of gage	10	____
2.	Width of narrow end	10	____
3.	Width of wide end	10	____
4.	Vee position for cold chisel angle	10	____
5.	Angle for drill cutting edge	15	____
6.	Accuracy of the 1" and 1/2" rules	10	____
7.	Angle for drill lip clearance	10	____
8.	Correct angle and size of bevel corners	5	____
9.	Finish	10	____
10.	Attitude and work habits	10	____
		100	
	Total Points		____

HOBAR PUBLICATIONS

1234 Tiller Lane St. Paul, Minnesota 55112

ORDER NO. 503

COLD CHISEL

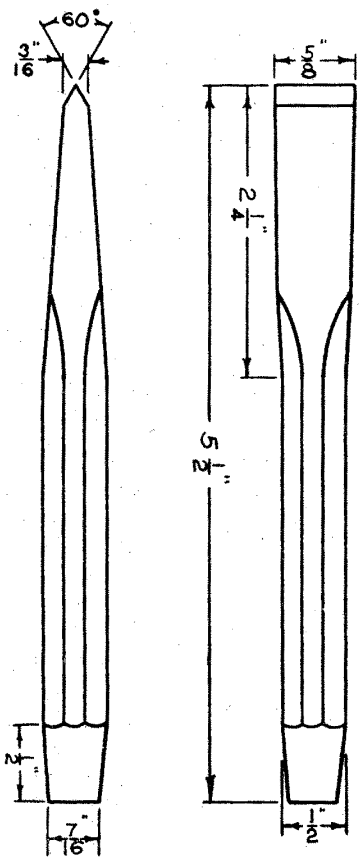

Construction Procedure:

1. Heat outer 2-1/4" of stock to a uniform cherry-red color.
2. Place one side against anvil face. Using drawing blows, work to shape rapidly starting at end and work back to 2-1/4" taper.
3. Finish to 3/16" at tip and 5/8" width. Do not work below a dull-red color.
4. Anneal - heat to cherry-red and cool slowly (12-24 hours) in lime or sand.
5. File and polish forged faces - Do not grind.
6. Temper with water: (Practice on old cold chisel).
   a. heat 2" to 3" of tip to uniform cherry-red color
   b. cool 3/4" to 1" until drops cling to tip when removed from water
   c. move tip to avoid cracks at water line
   d. quickly remove scale with steel brush or file
   e. observe color changes - quench lower 1/4" on purple color. Color order is light straw, dark straw, brown, purple, dark blue and light blue
7. Grind cutting edge to 60° angle. Use tool gage to check angle.
8. Chamfer end opposite point approximately 1/2" by 7/16" to prevent mushrooming.

Questions:

1. What is the carbon content of tool steel?_____
2. What steel making process is used in making tool steel?
   _____
3. The color in the color coding system for tool steel is
   _____.
4. Define annealing_____
   _____
5. At a dull cherry red the temperature in the metal is approximately _____°F.
6. If the color is stopped on light straw the cutting edge will be: a. brittle or b. soft.
7. Define tempering_____
   _____
8. What is the purpose of the chamfer?_____
   _____

Bill of Material:

1 - 1/2" x 5" octagon tool steel, .7 - .8 percent carbon content

Name_____

Date_____

Grade_____

Evaluation Score Sheet:

Item	Points Possible	Points Earned
1. Correct dimensions		
a. Chisel is 5-1/2" long	10	____
b. True taper and correct length	10	____
c. Chamfer dimensions and squareness	10	____
d. Cutting edge is 5/8" x 3/16"	10	____
e. Cutting edge ground to 60° - edges even and straight	15	____
2. Tempering - tip correct hardness	25	____
3. Overall appearance	10	____
4. Attitude and work habits	10	____
Total Points	100	____

HOBAR PUBLICATIONS

1234 Tiller Lane St. Paul, Minnesota 55112

ORDER NO. 504

TRACTOR DRAWBAR HITCH PIN

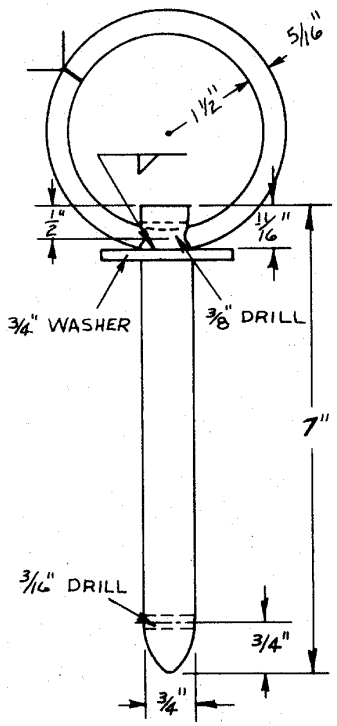

Operational Procedure:

1. Select and cut material according to plan.
2. Machine: (a) Drill holes for pull ring and safety catch pin. (b) Taper end for easy insertion. (c) Remove oil and oxide if present.
3. Heat Treatment: Suspend TDBHP in molten salt. CAUTION - Do not allow water to contact molten salt - result violent explosion. Allow TDBHP to remain for about 1 to 2 hours, depending upon depth of case desired. Remove and oil quench at end of heat period.
4. Fabrication: Arc weld washer and ring according to plan.

Questions:

1. Spark test before heat treatment.
   Low C Medium C High C
2. File test before and after heat treatment TDBHP Ring and Washer
3. Rockwell hardness on TDBHP test before heat treatment B_____ C_____
4. Rockwell hardness after heat treatment B_____ C_____
5. How can you visually distinguish hot-rolled from cold-rolled steel?
6. How can you use a piece of angle iron to align holes in round rod or pipe?
7. What tools do you need for locating and marking locations of holes?
8. What drill speed should be used in drilling the holes?
9. What grinding wheel safety precautions should be observed in grinding this pin?
10. How may an arc striking plate be used in welding this pin?

Bill of Material:

1 - 5/16" x 10-1/4" M1020 hot rolled round
1 - 3/4" flat washer
1 - 3/4" x 7" round C1020 cold rolled steel

Name_____

Date_____

Grade_____

Evaluation Score Sheet:

	Item	Points Possible	Points Earned
1.	Length of pin	5	_____
2.	Tapered area smooth	10	_____
3.	Washer square to pin	10	_____
4.	Washer spaced correctly	10	_____
5.	Weld on washer	15	_____
6.	Round handle	10	_____
7.	Handle centered	10	_____
8.	Weld on handle	15	_____
9.	Holes centered and aligned	5	_____
10.	Attitude and work habits	10	_____
	Total Points	100	_____

SHOE SCRAPER WITH CONCRETE BASE

Order No. 540

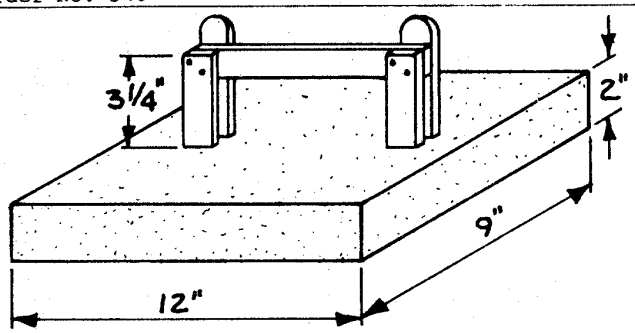

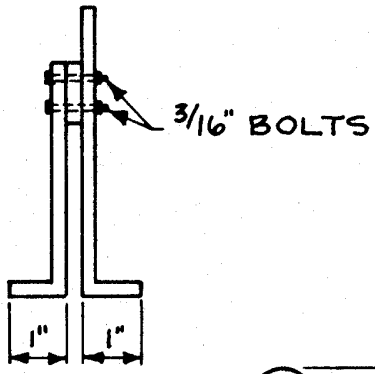

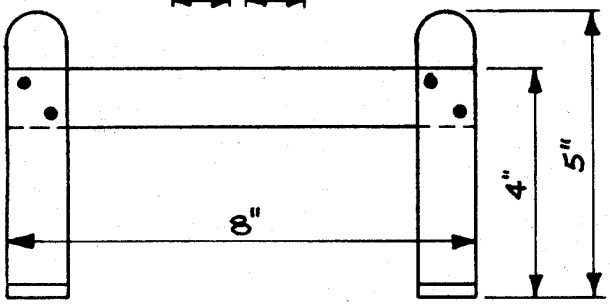

Construction Procedure:

1. Measure and cut metal pieces.
2. Heat metal, bend legs in vise.
3. Grind leg tops.
4. Mark and center punch holes.
5. Drill holes for 3/16" bolts.
6. Assemble shoe scraper and cut off excess bolts.
7. Construct form for concrete base.
8. Oil forms.
9. Measure dry ingredients and place in mixer.
10. Mix dry ingredients.
11. Measure water, place in mixer and mix concrete.
12. Place concrete in forms about one-half full.
13. Vibrate concrete in mold.
14. Position shoe scraper in mold.
15. Fill mold with concrete.
16. Screed level with surface.
17. Finish with float or trowel.
18. Remove from mold in 24 hours.
19. Place in water tank for 10-14 days.
20. Paint metal shoe scraper.

Construction Teaches: Ability to. . . .

1. Measure and cut wood and steel.
2. Heat and bend metal.
3. Drill holes in steel.
4. Assemble the shoe scraper.
5. Construct a form for the concrete base.
6. Measure concrete ingredients.
7. Mix ingredients and cast concrete.
8. Remove concrete from the form.
9. Cure the concrete.
10. Clean and paint the shoe scraper.

Materials:

1. One & one-half quarts grey Portland cement
2. Two & one-half quarts sand
3. Two & one-half quarts small gravel
4. One quart water
5. 30" 1/4" x 1" mild steel strips
6. Four 3/16" x 1" round head stove bolts
7. Exterior plywood pallets, 12" x 15"
8. 1" x 2" x 48" form lumber
9. Five gallon concrete mixer, HoBar M-58
10. Wood float, magnesium float or steel trowel, HoBar No.'s: M-44, M-145 & M-MX-64.
11. Brush, form oil & paint

NAME: _____

DATE: _____ EVALUATION: _____

Evaluation Score Sheet:

Item	Points Possible	Points Earned
1. Dimensions of shoe scraper.	15	_____
2. Dimensions of concrete base	15	_____
3. Location of shoe scraper on base. . .	10	_____
4. Concrete finish. . .	20	_____
5. Shoe scraper finish.	20	_____
6. Cleaning of concrete equipment.	10	_____
7. Safety and work habits	10	_____
Total Points	100	_____

HOBAR PUBLICATIONS

1234 Tiller Lane St. Paul, Minnesota 55112

02:1

Headache Rack

Scale: ¾" = 1'

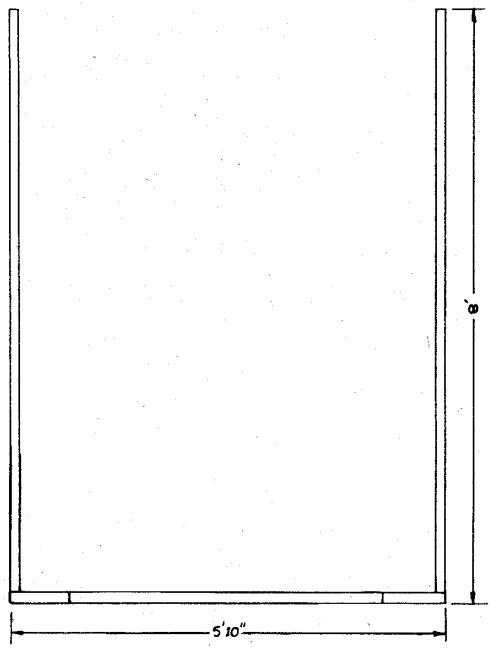

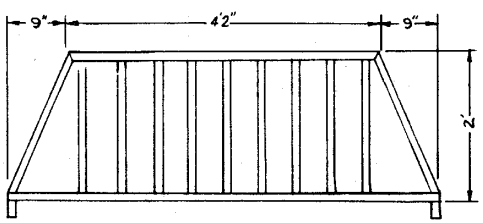

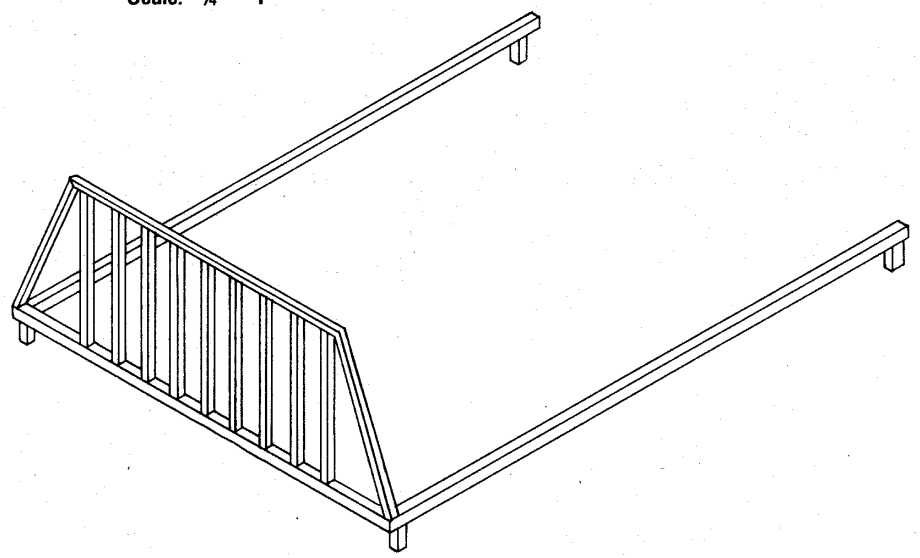

BILL OF MATERIAL

2 PIECES OF 1½" SQUARE TUBING 8' LONG
1 PIECE OF 1½" SQUARE TUBING 5'10" LONG
9 PIECES OF 1" SQUARE TUBING 1'10" LONG
2 PIECES OF 1" SQUARE TUBING 2'8" LONG
1 PIECE OF 1" SQUARE TUBING 4'2" LONG
4 PIECES OF 1½" SQUARE TUBING 4" LONG

Courtesy of Jim Nash
Vocational Agriculture Department

Curriculum and Instructional Materials Center
State Department of Vocational and Technical Education
Stillwater, Oklahoma

DWN BY: JOHN McEACHERN

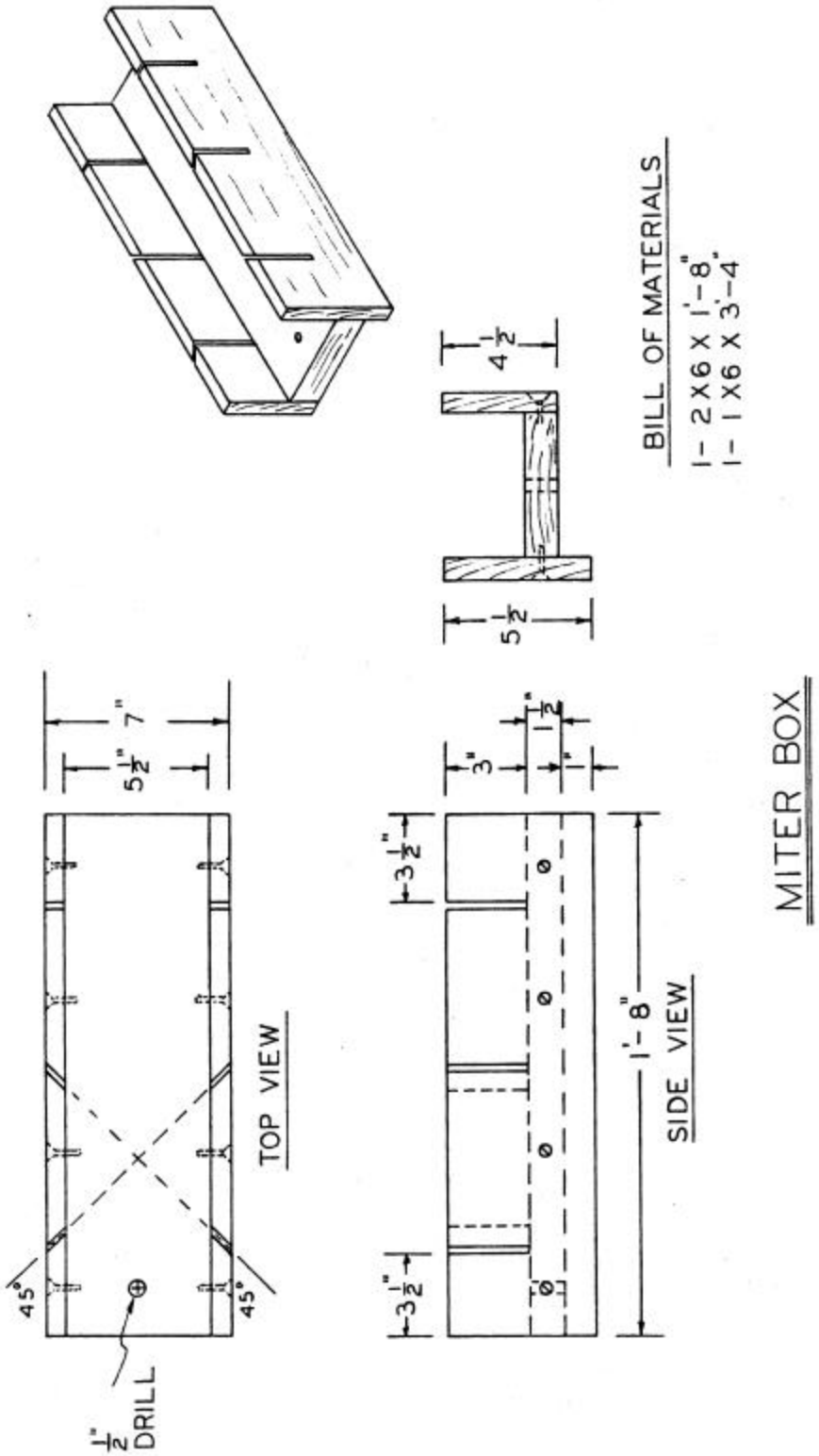
BILL OF MATERIALS
1- 2X6 X 1'-8"
1- 1 X6 X 3'-4"
4 1/2
5 1/2
7"
5 1/2"
45°
45°
1/2" DRILL
TOP VIEW
3"
1 1/2"
3 1/2"
3 1/2"
1'- 8"
SIDE VIEW
MITER BOX

NAIL BOX

Order No. 553

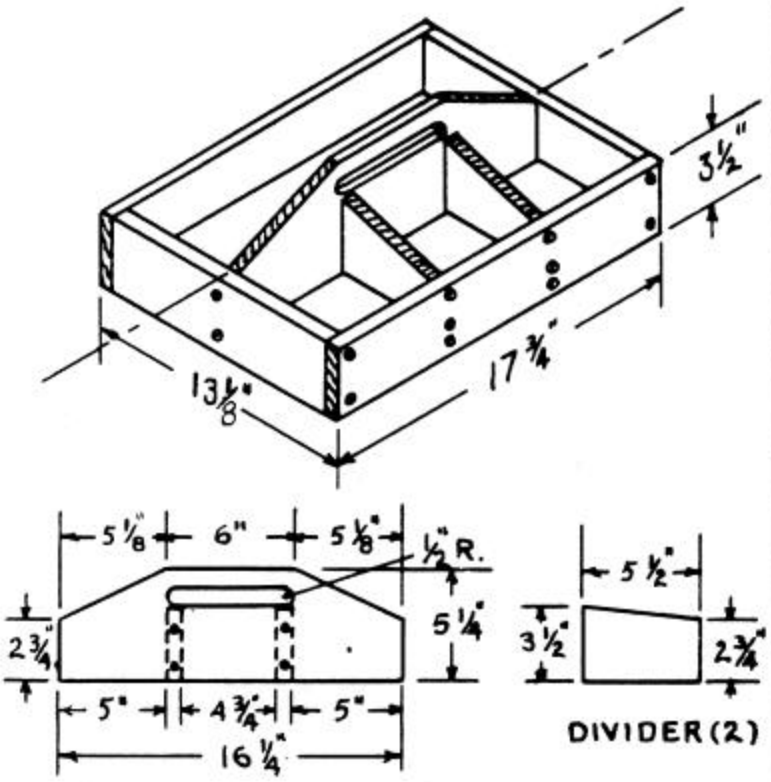

Materials:

1. 1 - 3/4" x 11-5/8" x 16-1/4" - Botton
2. 2 - 3/4" x 3-1/2" x 11-5/8" - Ends
3. 2 - 3/4" x 3-1/2" x 17-3/4" - Sides
4. 1 - 3/4" x 5-1/2" x 16-1/4" - Handle
5. 2 - 3 4" x 3-1/2" x 5-1/2" - Dividers
6. 26 - 8# x 1-1/2" F.H. Wood Screws
7. 7d Nails.
8. Waterproof or water resistant glue.

NAME: _____

DATE: _____ EVALUATION: _____

Construction Teaches: Ability to . . .

1. Read a plan.
2. Lay out the parts on a board.
3. Select the correct saws.
4. Saw materials to dimension.
5. Select the correct plane.
6. Use the plane.
7. Use a drill to drill pilot, body and countersink holes for screws.
8. Select different types of screws and nails.
9. Drive screws.
10. Select the correct sandpaper.
11. Paint the complete project.
12. Properly clean paint brush and can.

Construction Procedure:

1. Select materials: boards, nails,screws sandpaper and paint.
2. Lay out the parts.
3. Saw to dimension.
4. Plane to dimension.
5. Sand surfaces.
6. Assemble with finishing nails.
7. Prebore holes for screws.
8. Disassemble and mix glue.
9. Apply glue, assemble with nails and screws.
10. Clean excess glue from joints.
11. Sand and finish joints.
12. Paint.
13. Clean the paint brush and can.

Evaluation Score Sheet:

	Item	Points Possible	Points Earned
1.	Correct dimensions		
	length	5	_____
	width	5	_____
	height	5	_____
	handle	25	_____
	dividers	10	_____
2.	Square corners & joints.	10	_____
3.	Placement of screws. . .	15	_____
4.	Paint finish	10	_____
5.	Overall appearance . . .	5	_____
6.	Attitude and work habits	10	_____
		100	_____

HOBAR PUBLICATIONS

1234 Tiller Lane St. Paul, Minnesota 551

Order No. 554

NAIL & TOOL CARRIER

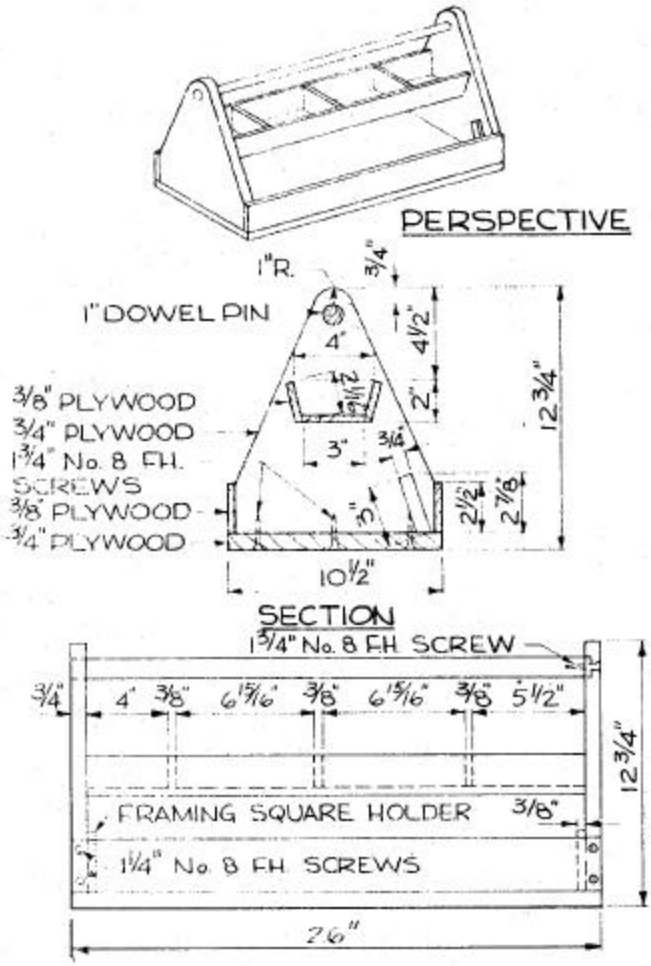

Materials:

1. 2 - 3/4" x 9-3/4" ends
2. 1 - 3/4" x 10-1/2" x 26" bottom
3. 2 - 3/8" x 2-1/2" x 26" sides
4. 1 - 3/8" x 3" x 24-1/2" tray bottom
5. 2 - 3/8" x 2-1/16" x 24-1/2" tray sides
6. 1 - 3/8" x 2" x 11" tray partition
7. 1 - 1" x 26" dowel pin
8. 2 - 3/8" x 3/4" x 3" framing square holder
9. 8 - 1-1/2" #8 F.H. wood screws (sides)
10. 6 - 1-3/4" #8 F.F. wood screws (ends)
11. Nails, 3d & 7d
12. Exterior plywood or pine boards as desired
13. Waterproof or water resistant glue

NAME: _____

DATE: _____ EVALUATION: _____

Construction Procedure:

1. Lay out material from cutting list.
2. Cut parts to dimension.
3. Bevel edges of bottom of tray.
4. Bore holes for handle in ends.
5. Assemble with small nails to check dimensions.
6. Prebore screw holes.
7. Disassemble and mix glue.
8. Apply glue, assemble with nails and screws.
9. Clean excess glue from joints.
10. Allow glue to set.
11. Sand and finish joints.
12. Paint or varnish.

Construction Teaches: Ability to . . .

1. Read a plan and prepare a cutting list.
2. Measure and mark dimensions.
3. Select correct saw and saw blade.
4. Saw boards to dimension.
5. Use a saber, jig or band saw.
6. Use brace and bit or electric drill and bit.
7. Select correct nails and screws.
8. Select correct wood adhesive.
9. Glue, nail & drive screws diring assembly.
10. Sand and finish wood for painting.
11. Select paint or varnish
12. Apply paint or varnish, clean & store brushes.

Evaluation Score Sheet:

Item	Points Possible	Points Earned
1. Correct dimensions:		
length	10	_____
width	10	_____
height	10	_____
handle placement . . .	5	_____
tray location	10	_____
2. Square corners & joints	10	_____
3. Edges square and smooth	10	_____
4. Placement of nails and screws	5	_____
5. Finish and painting . .	10	_____
6. Overall appearance . .	10	_____
7. Safety & work habits .	10	_____
Total Points	100	_____

TOOL BOX

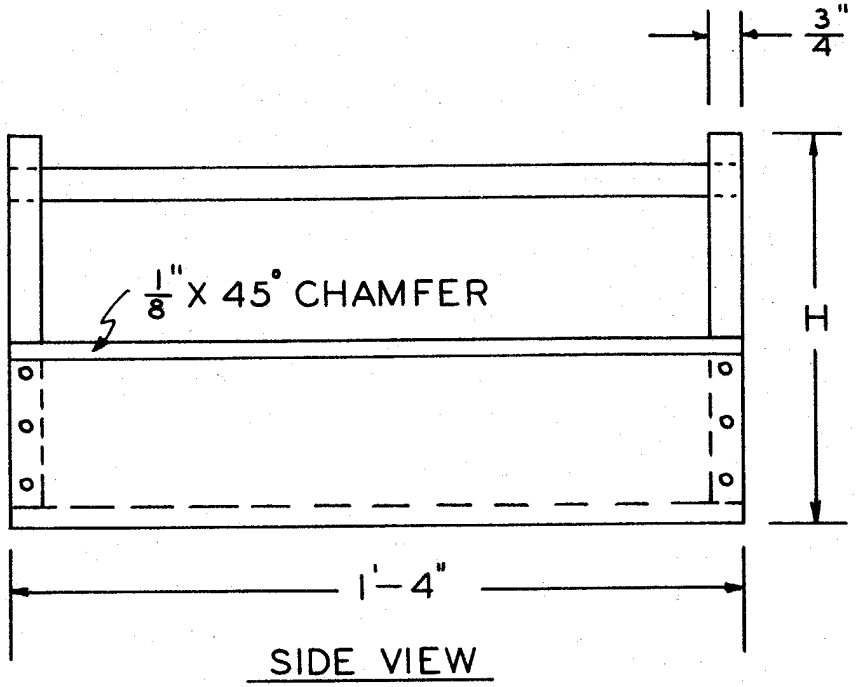

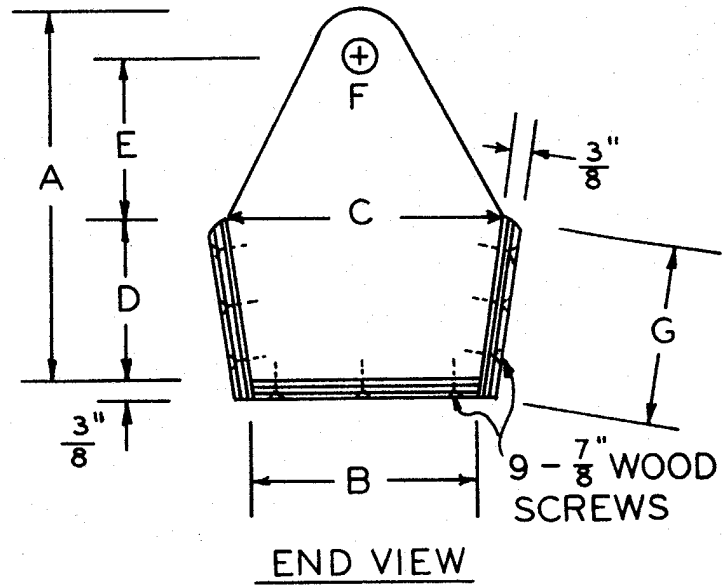

	LARGE	MEDIUM	SMALL
A	12"	9 1/2"	8"
B	7 1/2"	6"	5"
C	9"	7"	6"
D	5"	4"	3 1/2"
E	5 3/4"	4 1/2"	3 1/2"
F	1" DIA.	1" DIA.	1" DIA.
G	5 3/8"	4 3/8"	3 7/8"
H	12 3/8"	9 7/8"	8 3/8"

130Y-9

Order No. 555

SAWHORSE

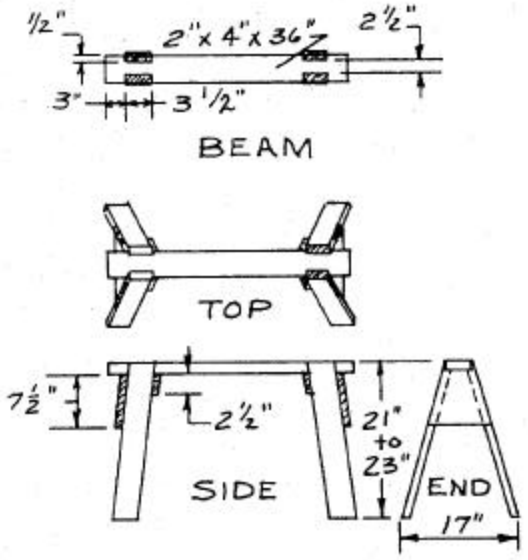

Construction Procedure:

1. Lay out legs and beam with framing square.
2. Cut leg angles and notch beam.
3. Assemble with scaffold nails.
4. Brace legs to desired measurements using temporary braces.
5. Cut permanent leg braces, tack in place.
6. Pre-bore screw holes in legs and braces.
7. Disassemble, apply glue to legs, joints & braces.
8. Assemble with temporary braces.
9. Check measurements with framing square.
10. Insert screws, remove temporary braces.
11. Wipe off excess glue, allow glue to set.
12. Finish with plane or sandpaper and paint.

Construction Teaches: Ability to . . . . .

1. Understand correct sawhorse height, spread of leg and beam extension.
2. Lay out edge and side angles of the leg.
3. Determine & lay out total length of leg.
4. Lay out cuts on beam and braces.
5. Saw boards and chisel leg joints on beams.
6. Select correct wood adhesive.
7. Select correct wood screws and nails.
8. Glue, assemble, screw and adjust to desired measurements.
9. Prepare sawhorse for painting.
10. Select and apply paint.
11. Properly clean brushes and painting utensils.

Materials:

1. 1 - 2" x 4" x 3'0" Const. Douglas Fir
2. 1 - 1" x 4" x 9'0" #2 White Pine
3. 1 - 1" x 8" x 2'6" #2 White Pine
4. 24- 1-1/2" 39 Bright F.H. Screws
5. 1 - Pint of paint, desired color
6. 4 oz. of Resorcinol Resin or Casein Glue
7. Sawhorse Layout with the Framing Square, Manual - HoBar #165

Evaluation Score Sheet:

Item	Points Possible	Points Earned
1. Dimensions (20)		
Sawhorse height	8	_____
Spread of legs	8	_____
Beam extension	4	_____
2. Angles (28)		
90° beam end to horizontal surface	6	_____
Centerline, equal spread of legs	6	_____
Bevel, bottom of legs . .	8	_____
All legs on floor	8	_____
3. Joint Preparation		
4 leg joints	12	_____
2 outside braces	6	_____
2 inside braces	6	_____
4. Assembly and Finish		
Screws, nails and glue properly used	10	_____
Finish	8	_____
Safety and work habits .	10	_____
Total	100	_____

NAME: _____

DATE: _____ EVALUATION: _____

HOBAR PUBLICATIONS

1234 Tiller Lane St. Paul, Minnesota 55112

SAWHORSE

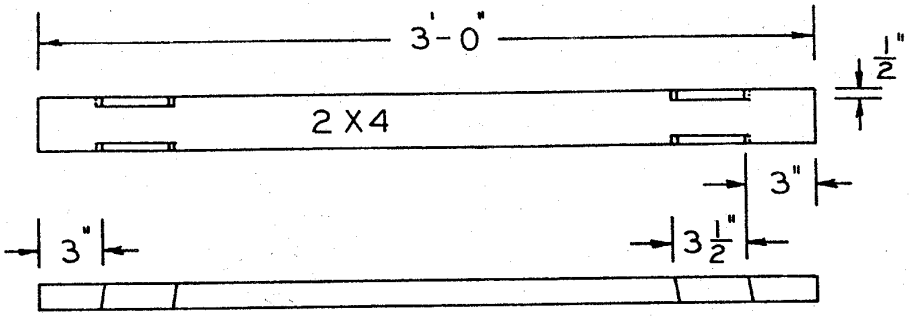

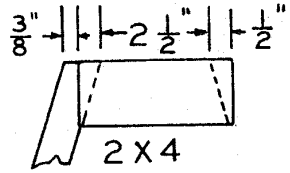

END BEAM

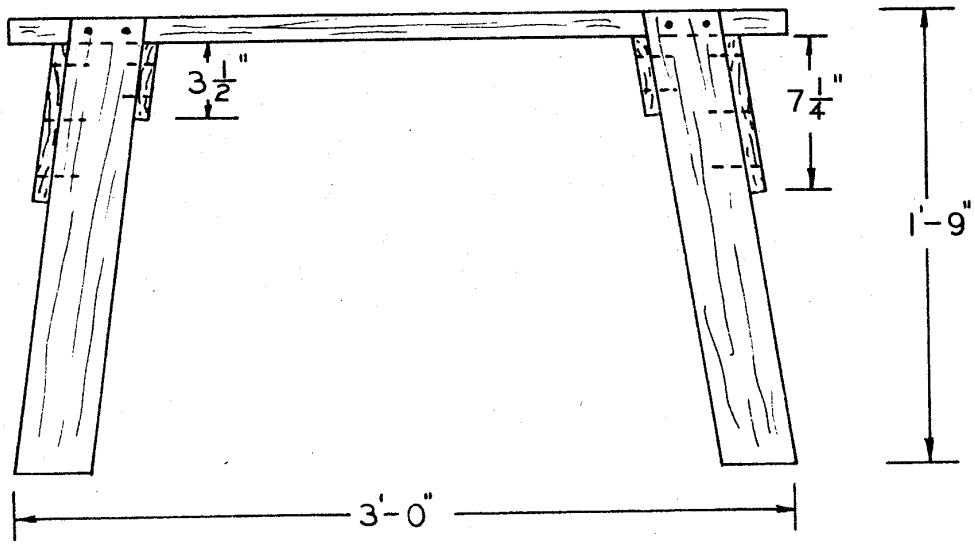

SIDE VIEW

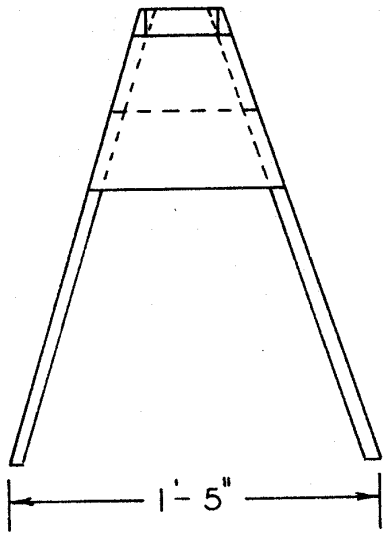

END VIEW

MATERIALS:

1 – 2X4 X 3'-0" CONST. DOUGLAS FIR
1 – 1X4 X 9'-0" # 2 WHITE PINE
1 – 1X8 X 1'-8" # 2 WHITE PINE
20 – 7d GALV. BOX NAILS
8 – 1 1/2" # 12 F.H. WOOD SCREWS

BILL OF MATERIAL

2 - $\frac{3}{4}$" X 5 $\frac{1}{2}$" X 31 $\frac{1}{2}$" EXT. PLYWOOD

1 - 1X4 X 10'-0"

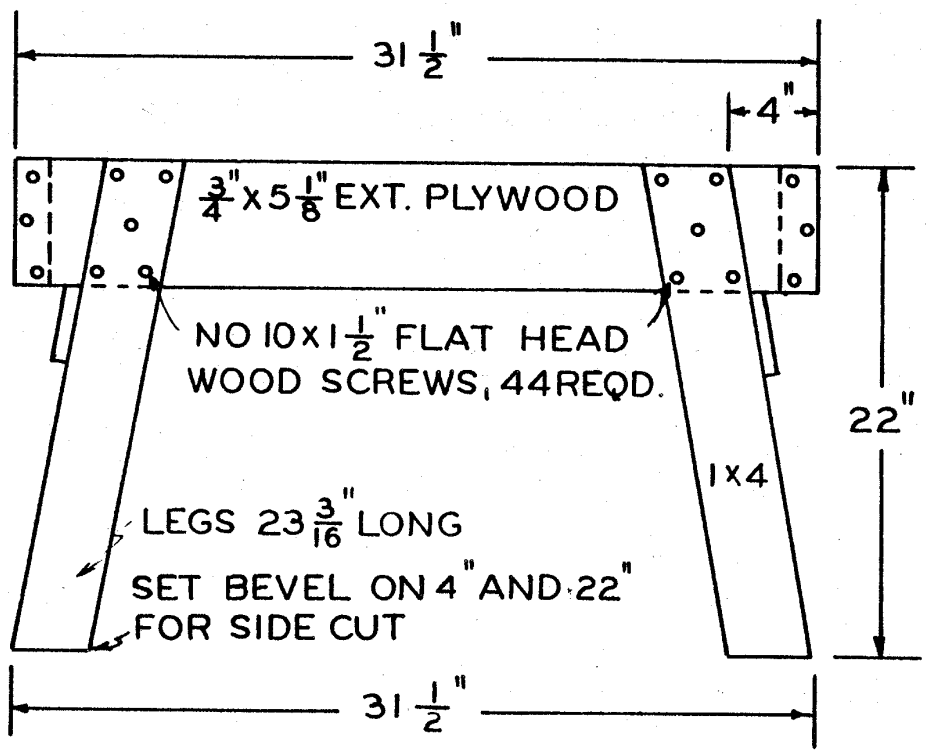

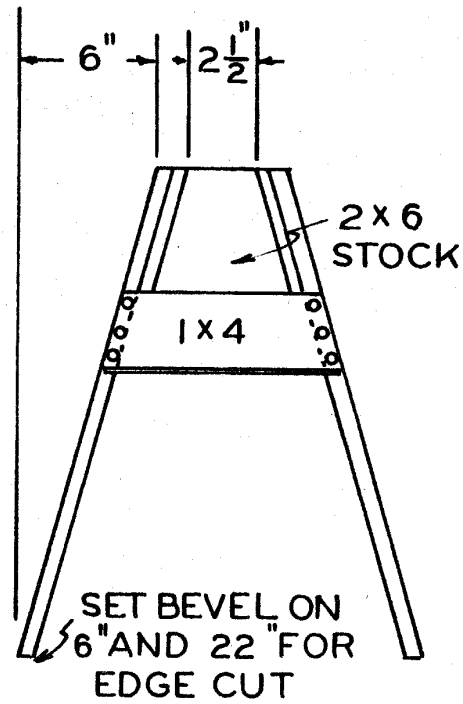

OPEN TOP SAWHORSE

130Y-12

IDEAS FOR AGRICULTURAL MECHANICS SHOPS

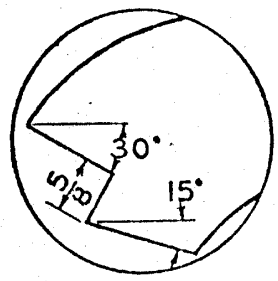

PUSH END DETAIL

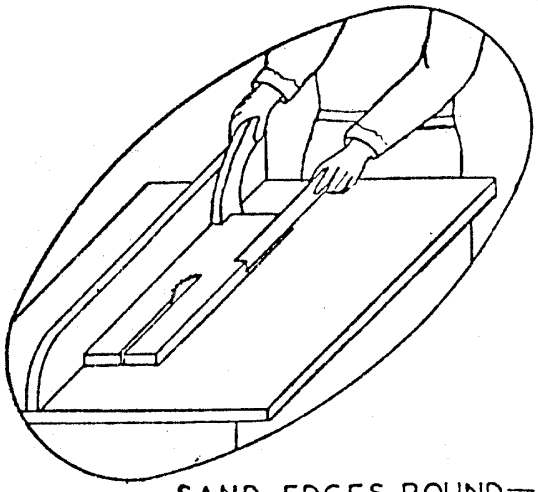

SAND EDGES ROUND

TABLE SAW PUSH STICKS

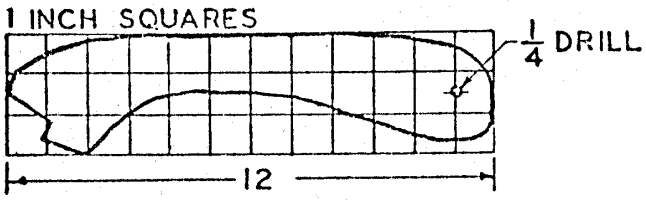

NOTE: ROUND ALL EDGES EXCEPT PUSH END

—RIGHT HAND—

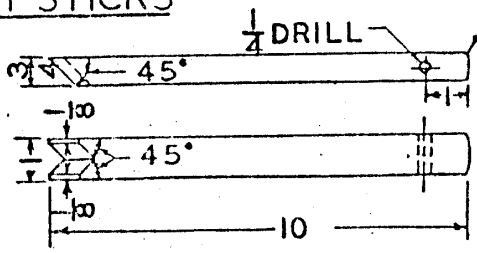

—LEFT HAND—

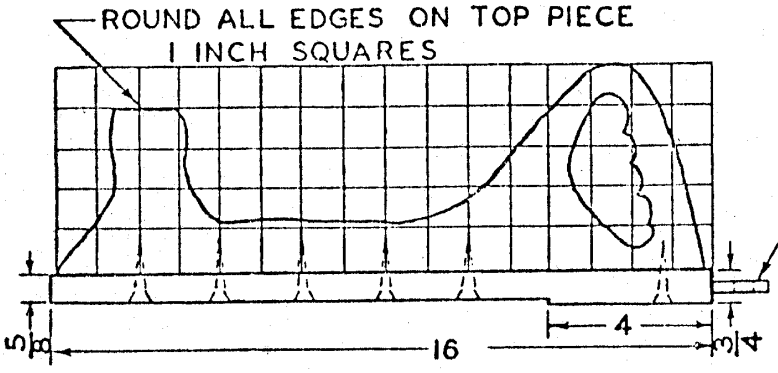

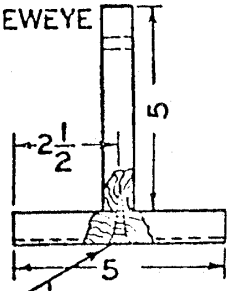

JOINTER PUSH STICK

MATERIALS NEEDED

SAW PUSH STICKS
- 1-3/4X1X10 MAPLE—L. HAND
- 1-3/4X3X12 MAPLE—R. HAND

JOINTER PUSH STICK
- 2-3/4X5X16 MAPLE
- 6-1 1/2X NO. 10 FLATHEAD WOOD SCREWS
- 1-SCREWEYE

Shop Cart

Scale: 3/8"=1"

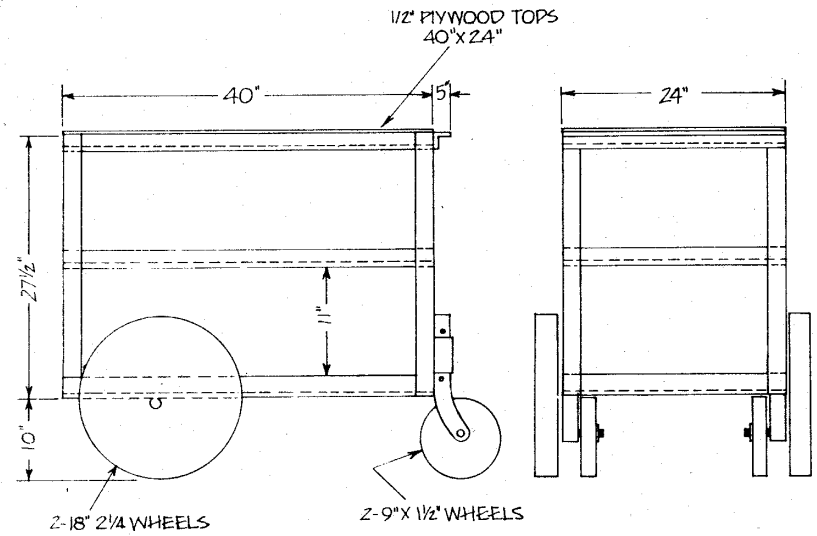

BILL OF MATERIAL

- 2" x 2" Angle Iron 41' Long
- 1/2" Sucker Rod 4' Long
- 1/2" Plywood 30 Square Feet
- 4 Metal Wheels

Curriculum and Instructional Materials Center
State Department of Vocational and Technical Education
Stillwater, Oklahoma

Courtesy of Guthrie
Vocational Agriculture Department

06:2

Portable Engine Stand

Scale: 3/32" = 1'

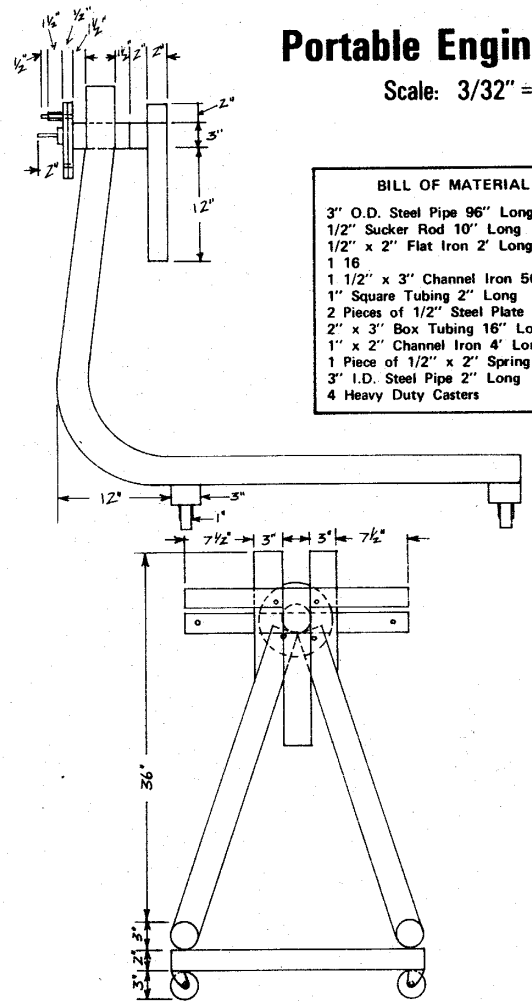

BILL OF MATERIAL

- 3" O.D. Steel Pipe 96" Long
- 1/2" Sucker Rod 10' Long
- 1/2" x 2" Flat Iron 2' Long
- 1 16
- 1 1/2" x 3" Channel Iron 56" Long
- 1" Square Tubing 2" Long
- 2 Pieces of 1/2" Steel Plate in 8" Squares
- 2" x 3" Box Tubing 16" Long
- 1" x 2" Channel Iron 4' Long
- 1 Piece of 1/2" x 2" Spring
- 3" I.D. Steel Pipe 2" Long
- 4 Heavy Duty Casters

Round Stock Welding Jig

Scale: 1/4" =1"

BILL OF MATERIAL

1 Piece of 3/16" Guage Metal 10" x 12"
1 Piece of 3" x 3" x 1/4" Angle Iron 12" Long
2 Pieces of 1/2" Strap 2" Wide x 5 1/2" Long
2 Pieces of 1/4" Plate 2" Wide x 3 1/2" Long
2 Pieces of 1/2" Rod 3" Long
2 Pieces of 1/2" Rod 2" Long

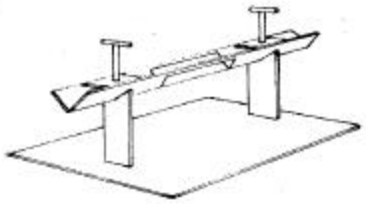

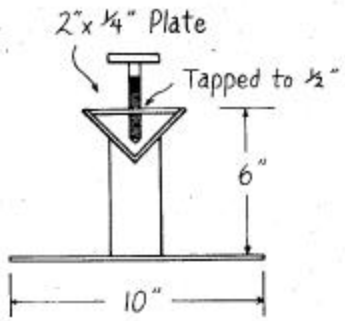

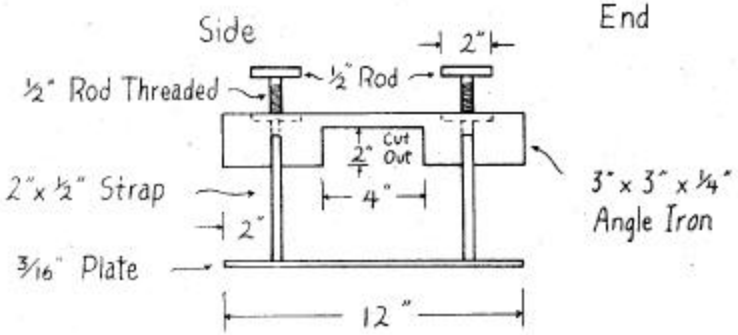

06:3

Portable Extension Outlet

Scale: 3/16" =1"

BILL OF MATERIAL

1 Piece of 1/2" Thinwall Conduit 32" Long
1 Piece of 1/4" Rod 14" Long
3 Pieces of 3/16" x 1" Flat Metal 12 1/2" Long
1 Piece of 1/2" Box Connector
1 Handy Box
1 · No. 16 Grounded Extension Cord 20' Long

Curriculum and Instructional Materials Center
State Department of Vocational and Technical Education
Stillwater, Oklahoma

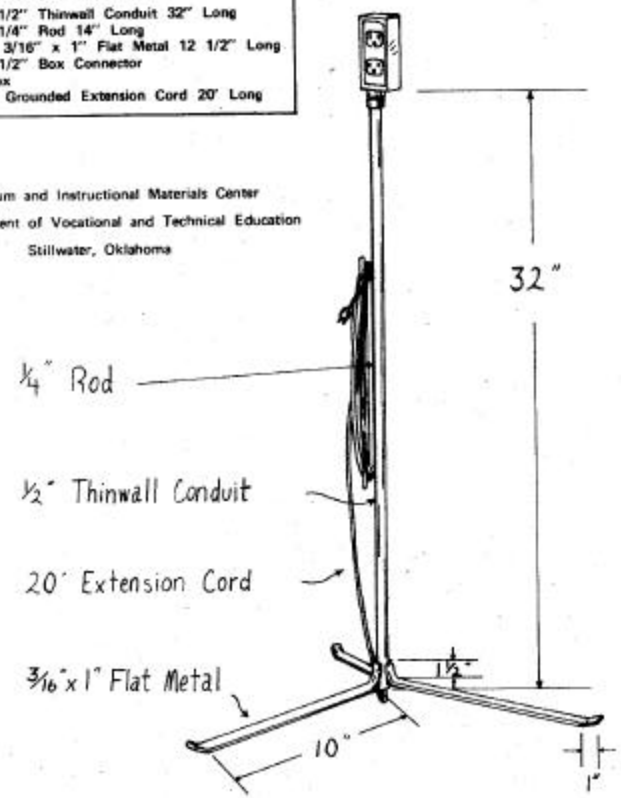

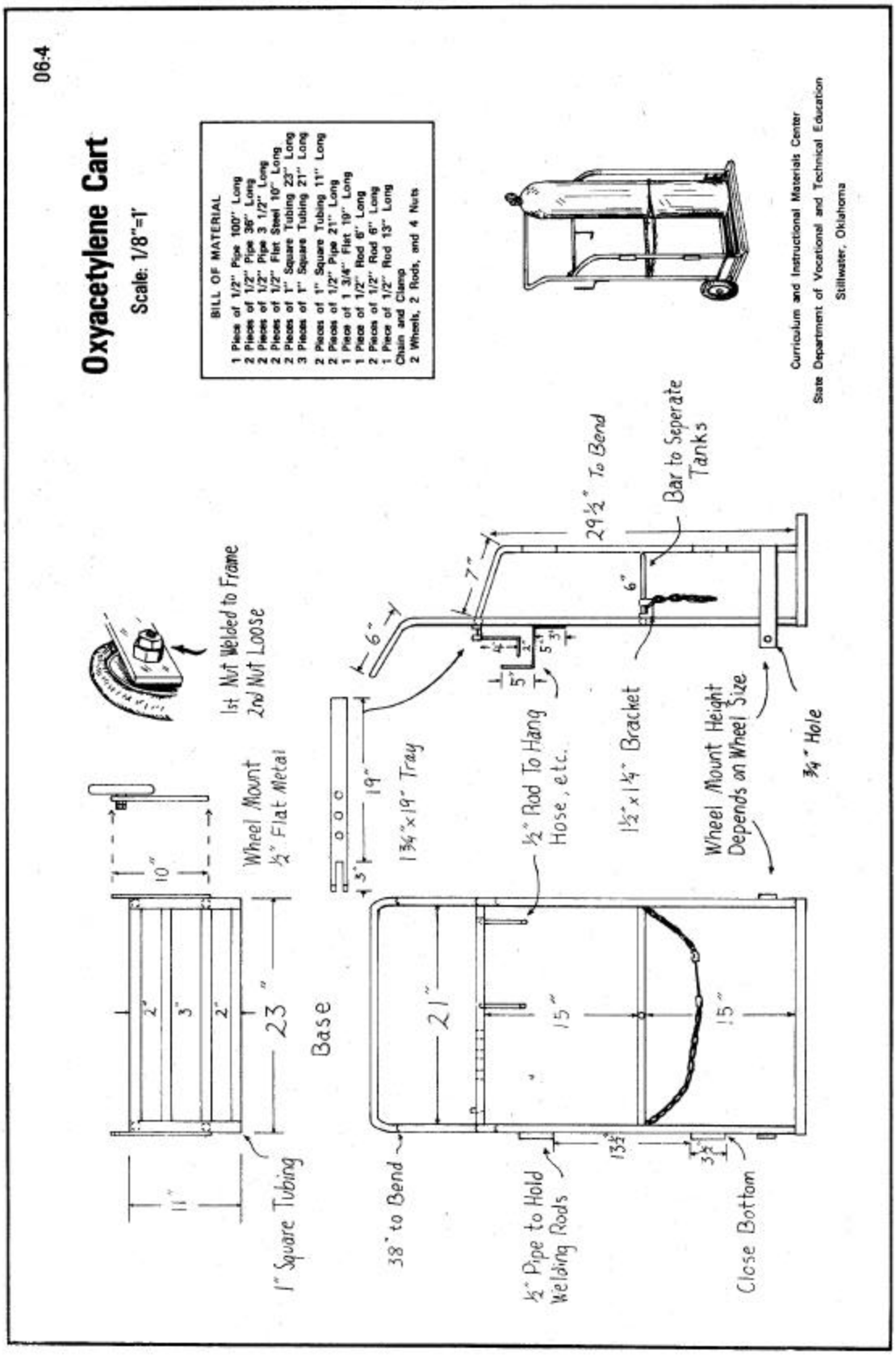
06:4
Oxyacetylene Cart
Scale: 1/8"=1'
BILL OF MATERIAL
1 Piece of 1/2" Pipe 100" Long
2 Pieces of 1/2" Pipe 36" Long
2 Pieces of 1/2" Pipe 3 1/2" Long
2 Pieces of 1/2" Flat Steel 10" Long
2 Pieces of 1" Square Tubing 23" Long
3 Pieces of 1" Square Tubing 21" Long
2 Pieces of 1" Square Tubing 11" Long
2 Pieces of 1/2" Pipe 21" Long
1 Piece of 1 3/4" Flat 10" Long
1 Piece of 1/2" Rod 6" Long
2 Pieces of 1/2" Rod 6" Long
1 Piece of 1/2" Rod 13" Long
Chain and Clamp
2 Wheels, 2 Rods, and 4 Nuts
Curriculum and Instructional Materials Center
State Department of Vocational and Technical Education
Stillwater, Oklahoma
1st Nut Welded to Frame
2nd Nut Loose
Wheel Mount
1/2" Flat Metal
10"
2"
3"
2"
23"
11"
1" Square Tubing
Base
3"
19"
13 3/4"x19" Tray
6"
7"
29 1/2" To Bend
Bar to Seperate Tanks
6"
1/2" Rod To Hang Hose, etc.
1 1/2"x1 1/4" Bracket
Wheel Mount Height Depends on Wheel Size
3/4" Hole
21"
15"
15"
38" to Bend
1/2" Pipe to Hold Welding Rods
13 1/2"
3 1/2"
Close Bottom

Trailer Jack Ramp

06:7

Scale: 3/16"=1"

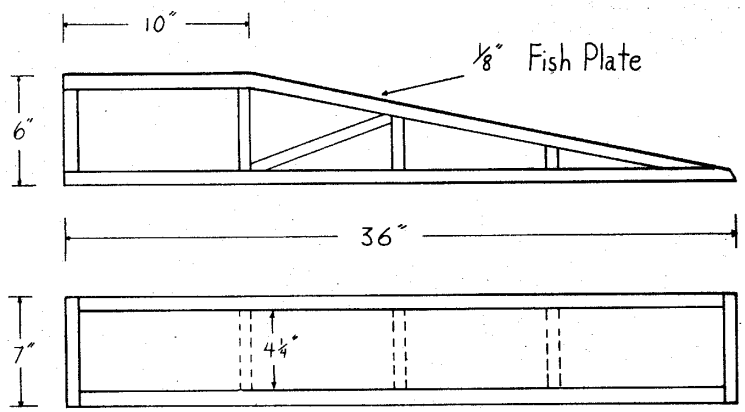

BILL OF MATERIAL

- 1 Piece of 1/8" Fish Plate 7" X 36"
- 1 Piece of 3/4" Pipe 18'8" Long
- 3 Pieces of 1 1/4" Pipe 65" Long
- 4 Pieces of 1" Pipe 14" Long

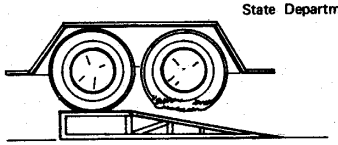

Curriculum and Instructional Materials Center
State Department of Vocational and Technical Education
Stillwater, Oklahoma

Courtesy of Carter
Vocational Agriculture Department

A-Frame

Scale: 1/2"= 1'

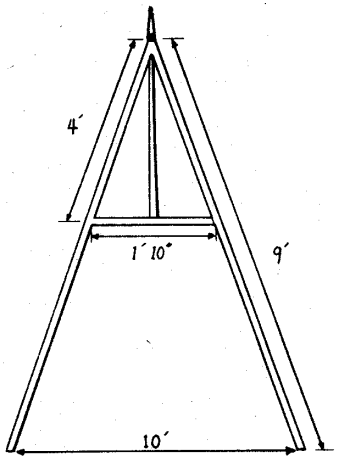

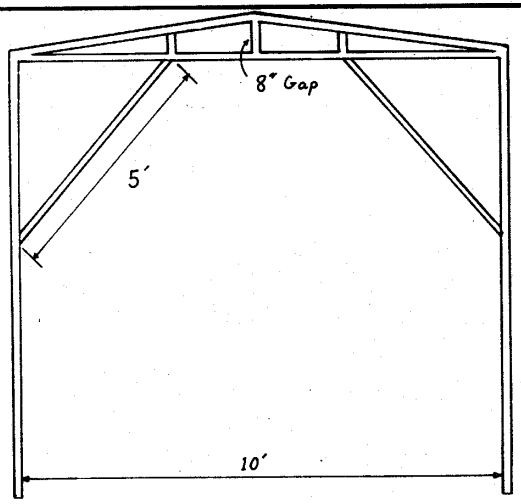

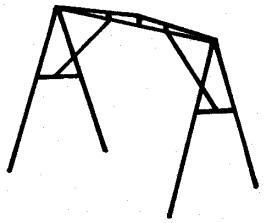

BILL OF MATERIAL

- 4 Pieces of 2" Pipe 9' Long
- 1 Piece of 2" Pipe 10' Long
- 2 Pieces of 2" Pipe 5'6" Long
- 1 Piece of 2" Pipe 8" Long
- 2 Pieces of 2" Pipe 3" Long
- 2 Pieces of 2" Pipe 1'10" Long
- 2 Pieces of 2" Pipe 5' Long

Courtesy of Jet-Nash
Vocational Agriculture Department

Bob Rea

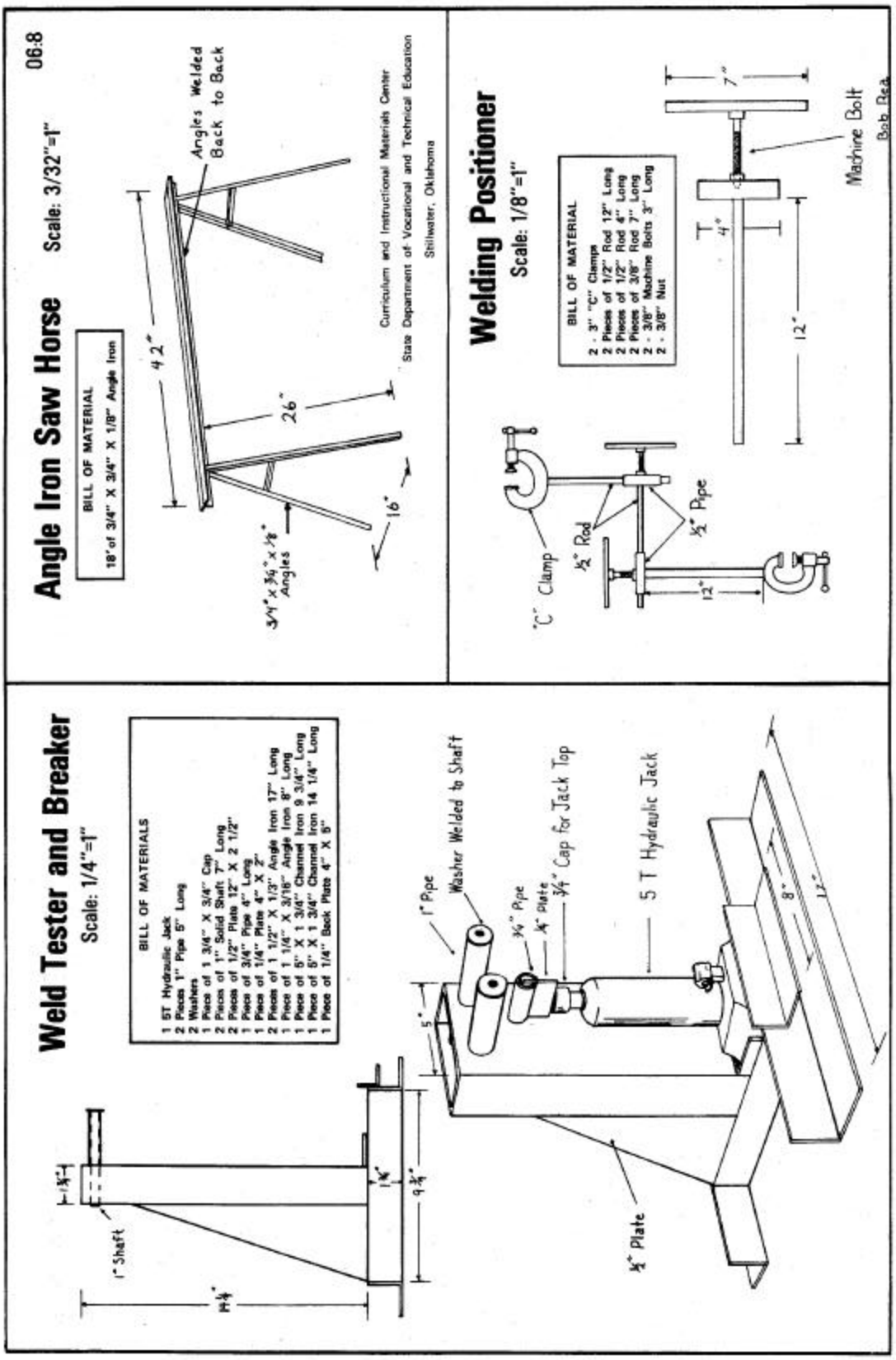
Angle Iron Saw Horse
Scale: 3/32"=1"
06:8
BILL OF MATERIAL
18' of 3/4" X 3/4" X 1/8" Angle Iron
Angles Welded Back to Back
42"
26"
16"
3/4" x 3/4" x 1/8" Angles
Curriculum and Instructional Materials Center
State Department of Vocational and Technical Education
Stillwater, Oklahoma
Welding Positioner
Scale: 1/8"=1"
BILL OF MATERIAL
2 - 3" "C" Clamps
2 Pieces of 1/2" Rod 12" Long
2 Pieces of 1/2" Rod 4" Long
2 Pieces of 3/8" Rod 7" Long
2 - 3/8" Machine Bolts 3" Long
2 - 3/8" Nut
"C" Clamp
1/2" Rod
1/2" Pipe
12"
4"
7"
Machine Bolt
Bob Rea
Weld Tester and Breaker
Scale: 1/4"=1"
BILL OF MATERIALS
1 5T Hydraulic Jack
2 Pieces 1" Pipe 5" Long
2 Washers
1 Piece of 1 3/4" X 3/4" Cap
2 Pieces of 1" Solid Shaft 7" Long
2 Pieces of 1/2" Plate 12" X 2 1/2"
1 Piece of 3/4" Pipe 4" Long
1 Piece of 1/4" Plate 4" X 2"
2 Pieces of 1 1/2" X 1/3" Angle Iron 17" Long
1 Piece of 1 1/4" X 3/16" Angle Iron 8" Long
1 Piece of 5" X 1 3/4" Channel Iron 9 3/4" Long
1 Piece of 5" X 1 3/4" Channel Iron 14 1/4" Long
1 Piece of 1/4" Book Plate 4" X 5"
1" Shaft
1" Pipe
Washer Welded to Shaft
3/4" Pipe
1/4" Plate
3/4" Cap for Jack Top
5 T Hydraulic Jack
1/4" Plate
5"
8"
12"

Acetylene Welding Table

Scale: 1/8"=1"

BILL OF MATERIAL

- 1 Piece of 3/8" X 1 1/2" X 12" Strap Iron
- 1 Piece of 3" Channel Iron 28" Long
- 1 Piece of 2" Pipe 58" Long
- 3 Pieces of 1 1/4" Pipe 32" Long
- 2 Pieces of 1" Pipe 19" Long
- 1 Piece of 3" X 3/16" Flat Stock 20 1/2" Long

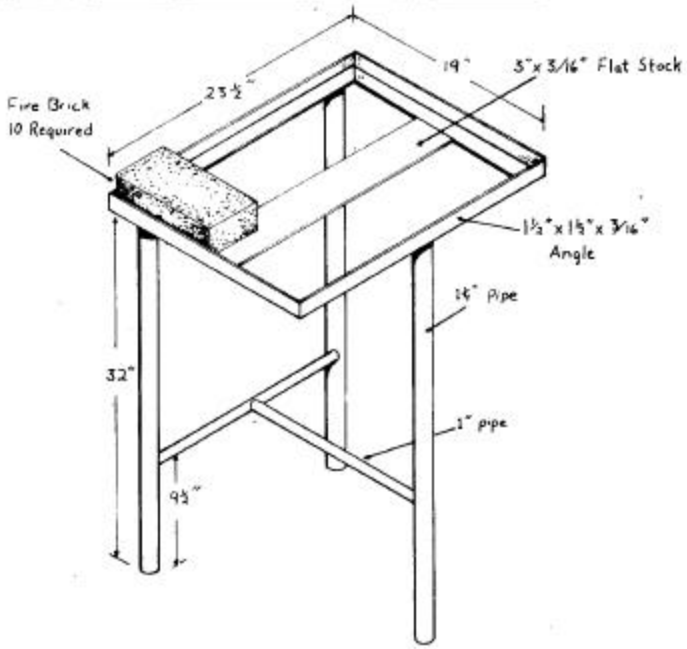

Workbench

06:9

Scale: 1/8"=1"

BILL OF MATERIAL

- 2 Pieces of 1 1/2" X 3/16" Angle 19" Long
- 2 Pieces of 1 1/2" X 3/16" Angle 23 1/2" Long
- 10 Fire Bricks

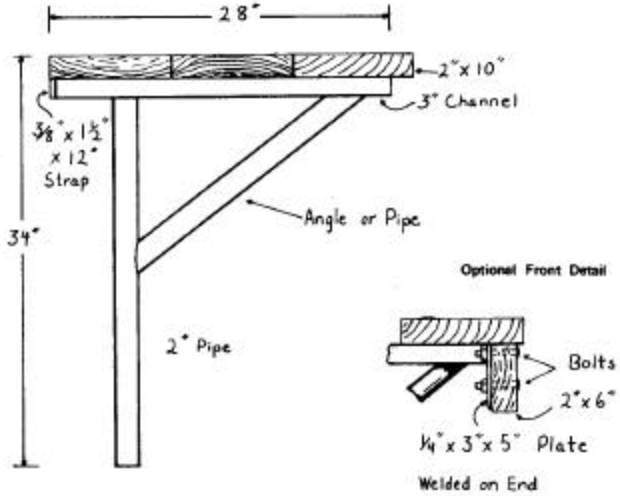

Curriculum and Instructional Materials Center
State Department of Vocational and Technical Education
Stillwater, Oklahoma

Bob Rea

Adjustable Tractor Holding Jack

Scale: 1/4"=1"

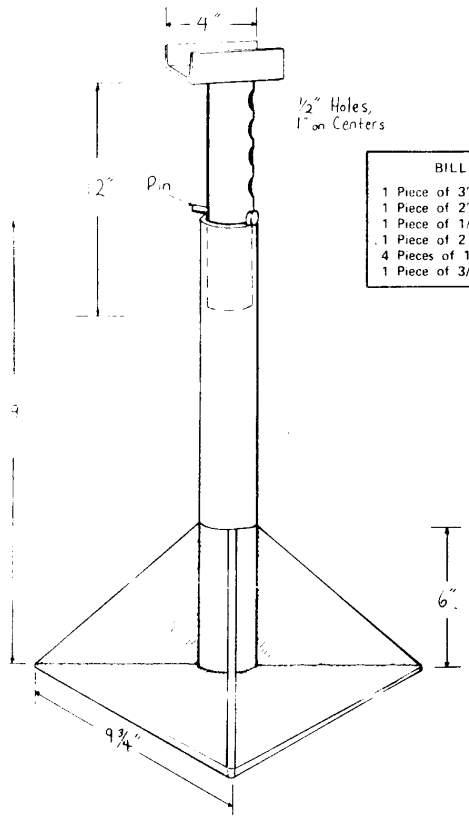

BILL OF MATERIALS

1 Piece of 3" Channel Iron 4" Long
1 Piece of 2" Pipe 12" Long
1 Piece of 1/2" Pin 5" Long
1 Piece of 2 1/2" Pipe 19" Long
4 Pieces of 1/4" Plate 6"X 6"
1 Piece of 3/8" Plate 9 3/4" X 9 3/4"

06:10

Hose Reel

Scale: 1/8" =1"

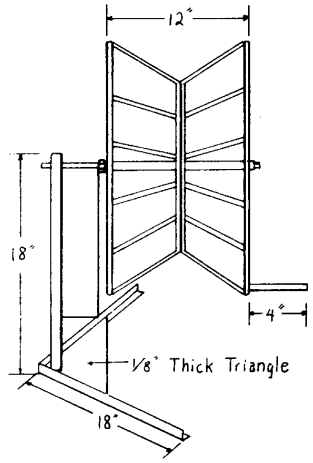

BILL OF MATERIALS

2 Pieces of 1" X 1/8" Strap 21" Long
1 Piece of 1/8" Plate 3" X 13"
1 Piece of 3/4" Pipe 18" Long
1 Piece of 3/8' Rod 18" Long
2 Pieces of 3/4" X 1/8" Angle Iron 18" Long
1 Piece of 5/8" Rod 4" Long
1 Piece of 1/2" Pipe 12" Long
1/4" Rod for Rims
3/16" Rod for Spokes
2 Nuts

Curriculum and Instructional Materials Center
State Department of Vocational and Technical Education
Stillwater, Oklahoma

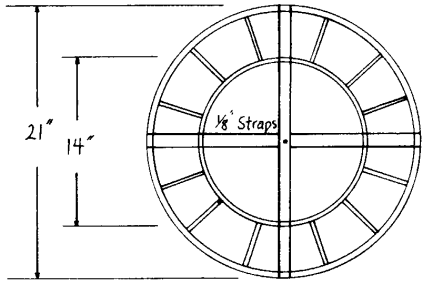

Bob Bea

06:12

Fly Wheel Wrench

Scale: 1"= 1"

BILL OF MATERIAL
1 Piece of 5/16" Mild Steel 13" Long
1 Piece of 3" Pipe Sleeve

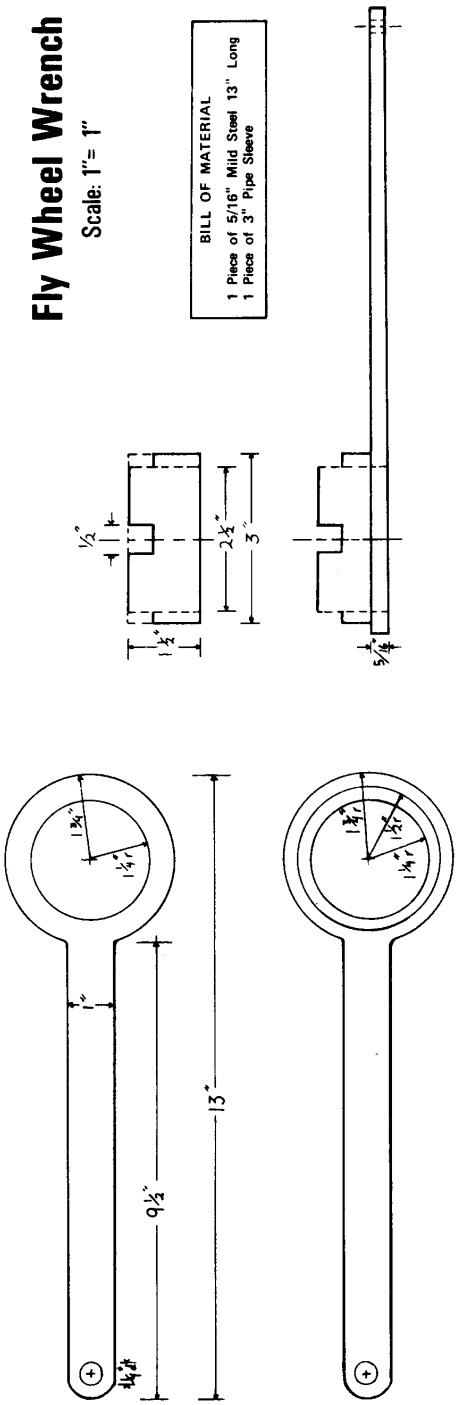

Fly Wheel Holder

Scale:1/2"= 1"

BILL OF MATERIAL
1 Piece of 5/16" Mild Steel 18" Long

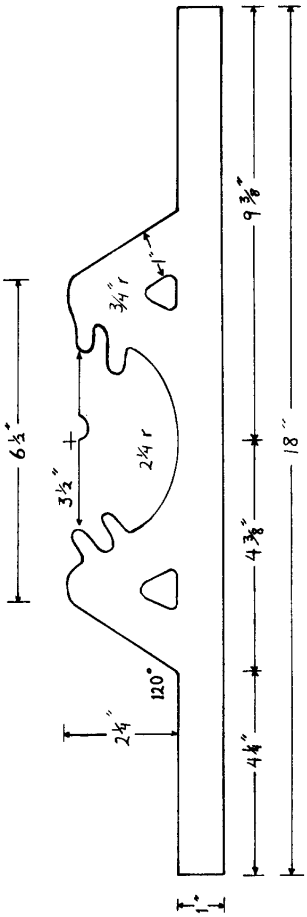

Curriculum and Instructional Materials Center
State Department of Vocational and Technical Education
Stillwater, Oklahoma

Bob Rea

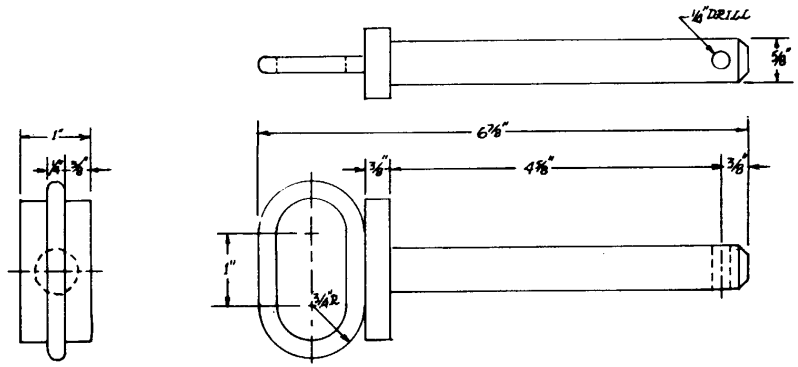

BILL OF MATERIAL
1 PIECE OF 3/4" ROD 5 7/8" LONG
1 PIECE OF 3/8" x 1" x 2" FLAT METAL
1 PIECE OF 1/8" ROD 6" LONG

Drawbar Pin

Scale: 3/4" = 1'

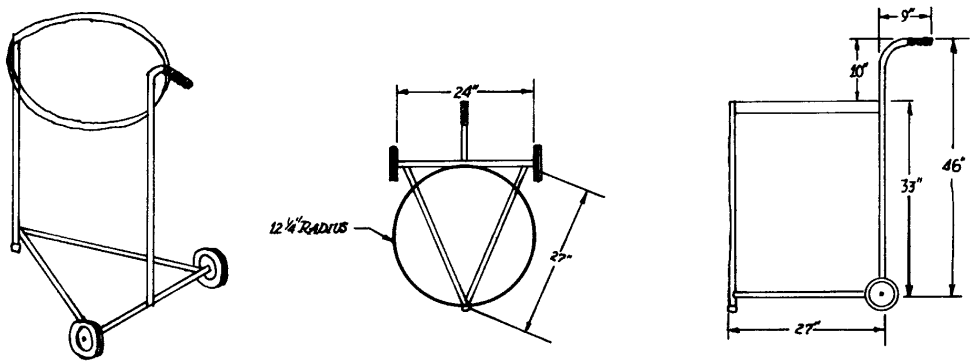

BILL OF MATERIAL
1 PIECE OF 1" PIPE 50" LONG
2 PIECES OF 1" PIPE 27" LONG
1 PIECE OF 1" PIPE 24" LONG
1 PIECE OF 1" PIPE 36" LONG
1 PIECE OF 1/4" x 2" STRAP METAL
2 - 6" WHEELS
1 - HANDLEGRIP

Barrel Holder

Courtesy of Keota
Vocational Agriculture Department

Curriculum and Instructional Materials Center
State Department of Vocational and Technical Education
Stillwater, Oklahoma

Post Driver

Scale: 3/16" = 1"

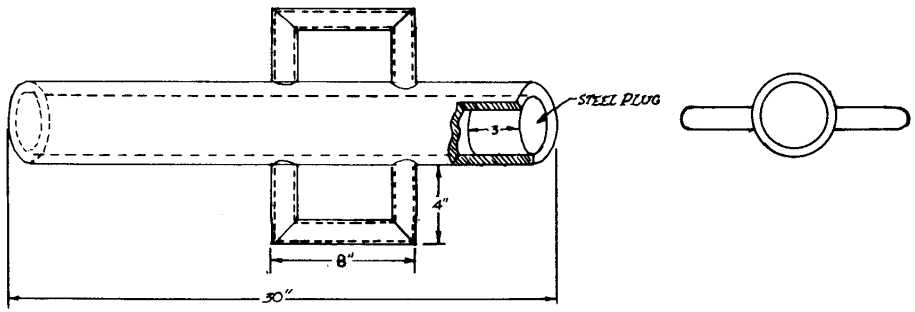

BILL OF MATERIAL
1 PIECE OF 4" PIPE 28" LONG
2 PIECES OF 1" PIPE 8" LONG
1-SOLID STEEL PLUG 3" LONG
4 PIECES OF 1" PIPE 4" LONG

Calf Puller

Scale: 1" = 1'

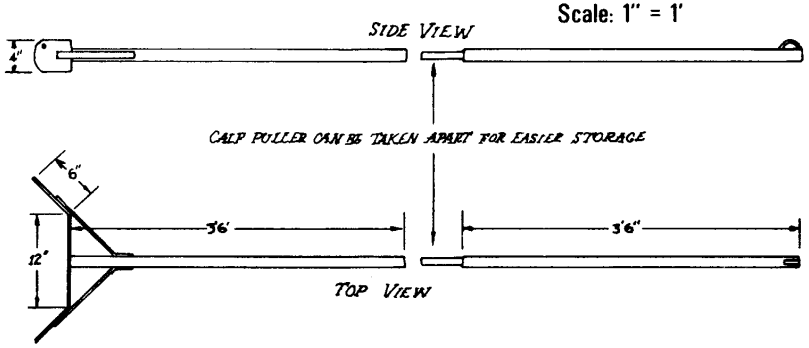

BILL OF MATERIALS
2 PIECES OF 1½" SQUARE TUBING 3'6" LONG
2 PIECES OF 1¼" SQUARE TUBING 12" LONG
1 PIECE OF FLATMETAL 24" x 4", 3/16"
2 PIECES OF 1" OR ¾" STRAP IRON 12" LONG
1 PIECE OF 3/8" ROD 5" LONG

Courtesy of Jet-Nash
Vocational Agriculture Department

Curriculum and Instructional Materials Center
State Department of Vocational and Technical Education
Stillwater, Oklahoma

DWN BY: JOHN McEACHERN

07:9

Farrowing Crate

Scale: 1"= 1'

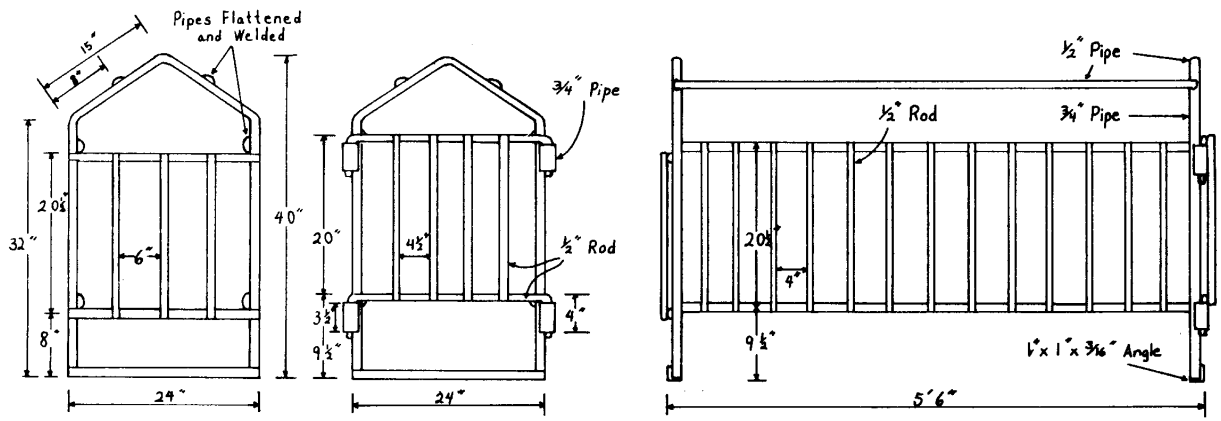

BILL OF MATERIAL

29 Pieces of ½" Rod 20½" Long
4 Pieces of ½" Rod 20" Long
4 Pieces of 1" X 1" X 3/16" Angle Iron
4 Pieces of ¾" Pipe 3½" Long
4 Pieces of ¾" Pipe 5'6" Long
2 Pieces of ½" Pipe 5'6" Long
2 Pieces of ½" Rod 24" Long
2 Pieces of ½" Rod 32" Long
4 Pieces of ½" Pipe 47" Long

Car Ramp

Scale: 1" = 1'

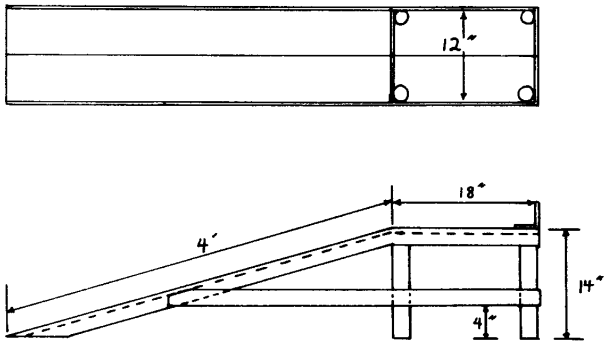

BILL OF MATERIAL

2 Pieces of 6" Channel Iron 18" Long
2 Pieces of 6" Channel Iron 48" Long
4 Pieces of 2" Pipe 14" Long
2 Pieces of 1½" Strap Iron 3' Long
1 Piece of 1½" Strap Iron 3' Long
Expand Metal Covering

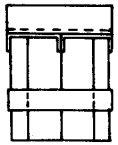

Curriculum and Instructional Materials Center
State Department of Vocational and Technical Education
Stillwater, Oklahoma

Courtesy of Eufaula
Vocational Agriculture Department

Bob Rea

Shoe Scraper and Cleaner

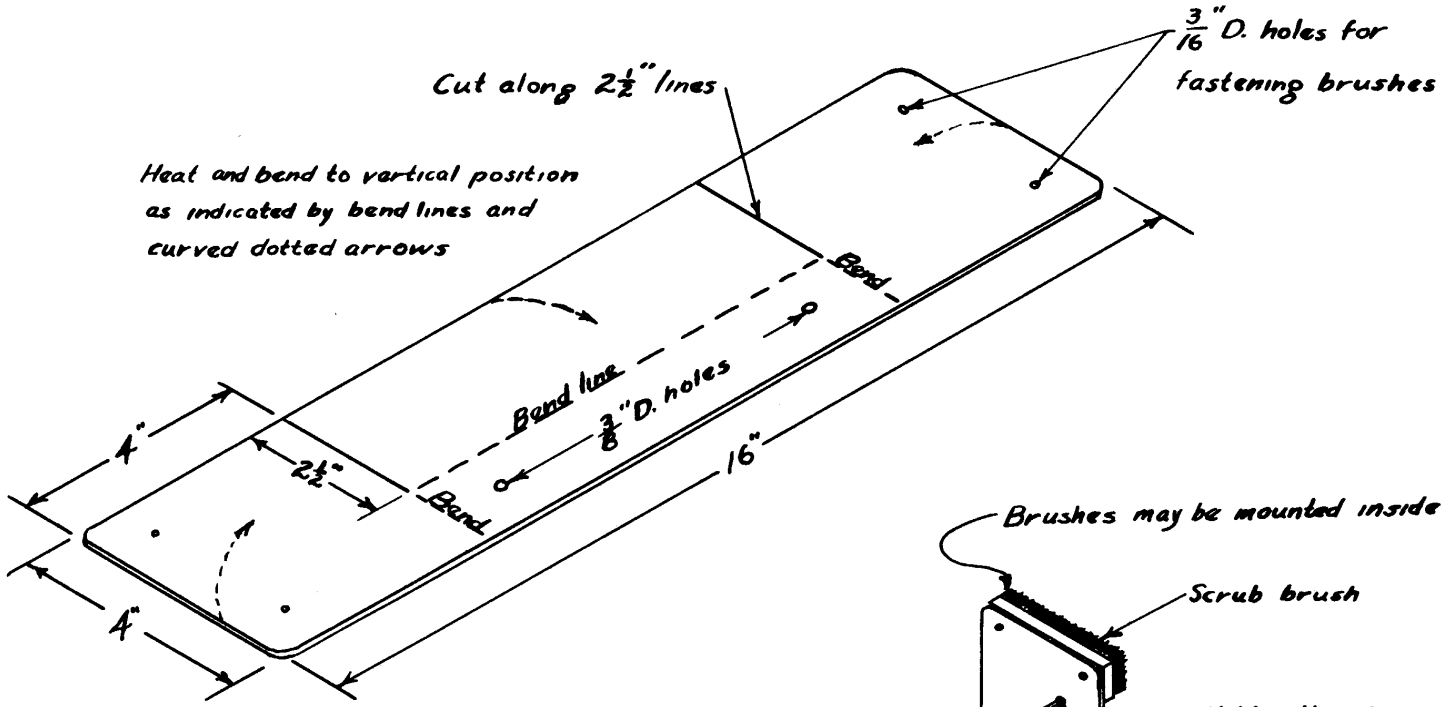

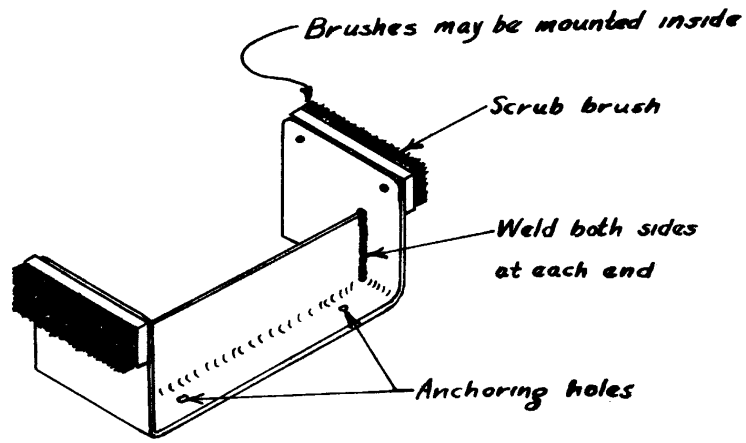

Bill of Materials
1 pc. Strap iron ¼" x 4" x 16"
2 Scrub brushes
4 Round head screws

Hay Hook

Bill of Materials	
Amt	Item
12"	5/16" Rod
5"	3/4" Pipe

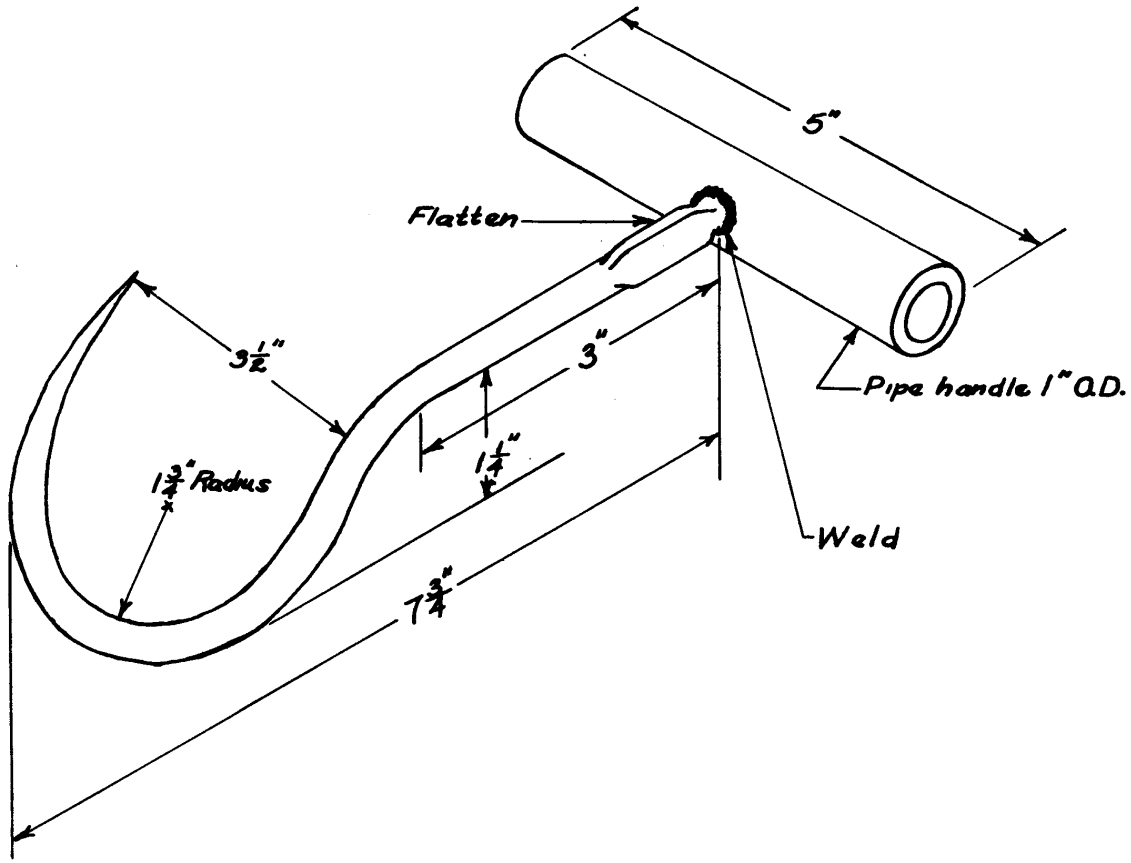

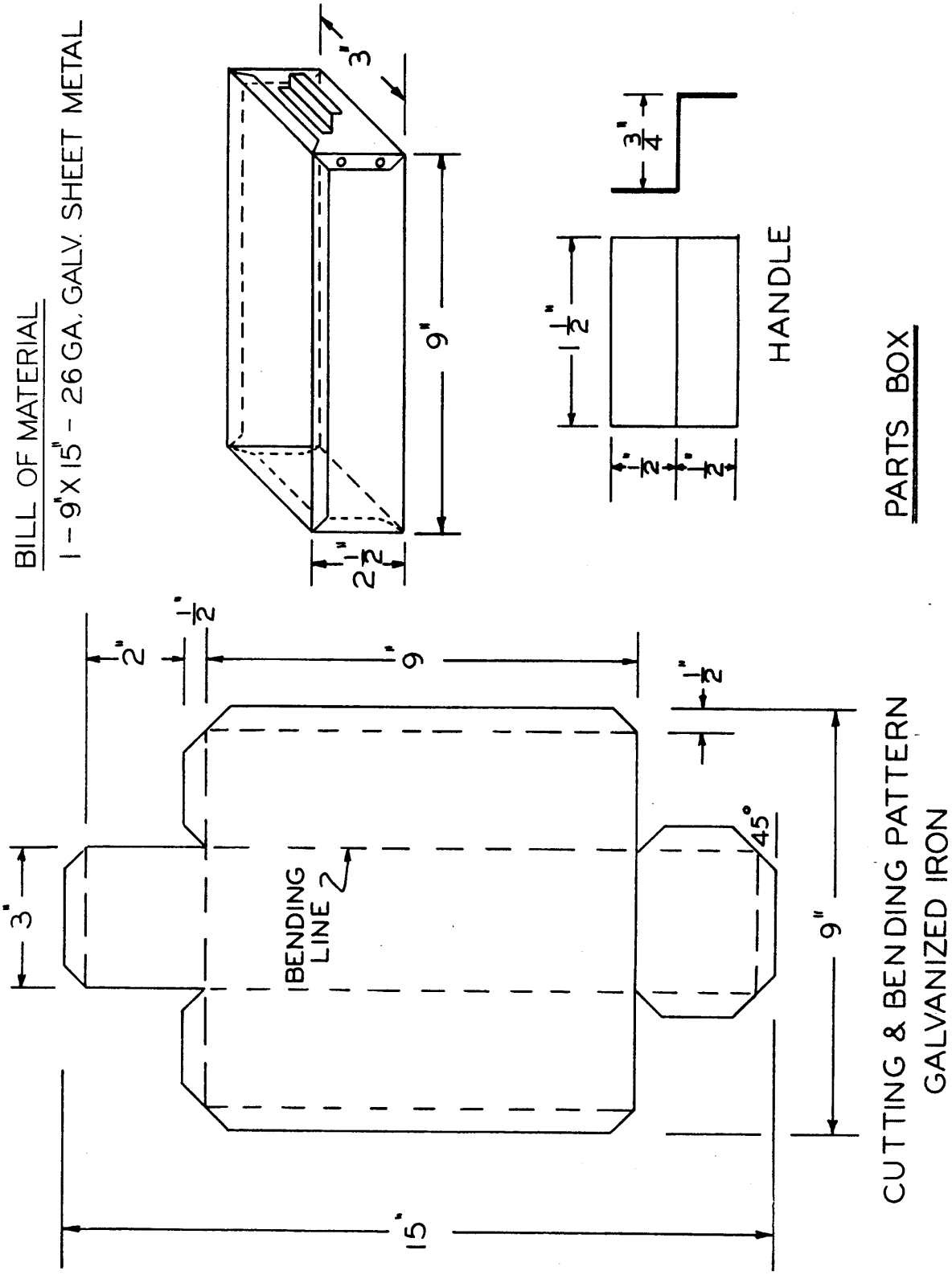
BILL OF MATERIAL
1 - 9"X 15" - 26 GA. GALV. SHEET METAL
3"
9"
2 1/2"
3/4"
1 1/2"
1/2"
1/2"
HANDLE
PARTS BOX
2"
1/2"
9"
1/2"
3"
BENDING LINE
45°
9"
15"
CUTTING & BENDING PATTERN
GALVANIZED IRON

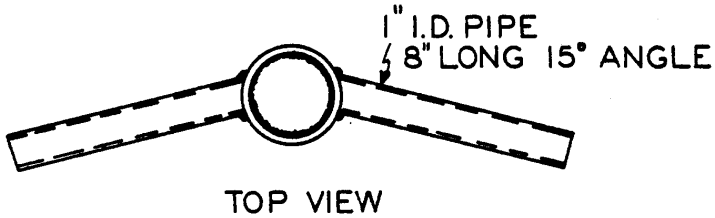
1" I.D. PIPE
8" LONG 15° ANGLE
TOP VIEW

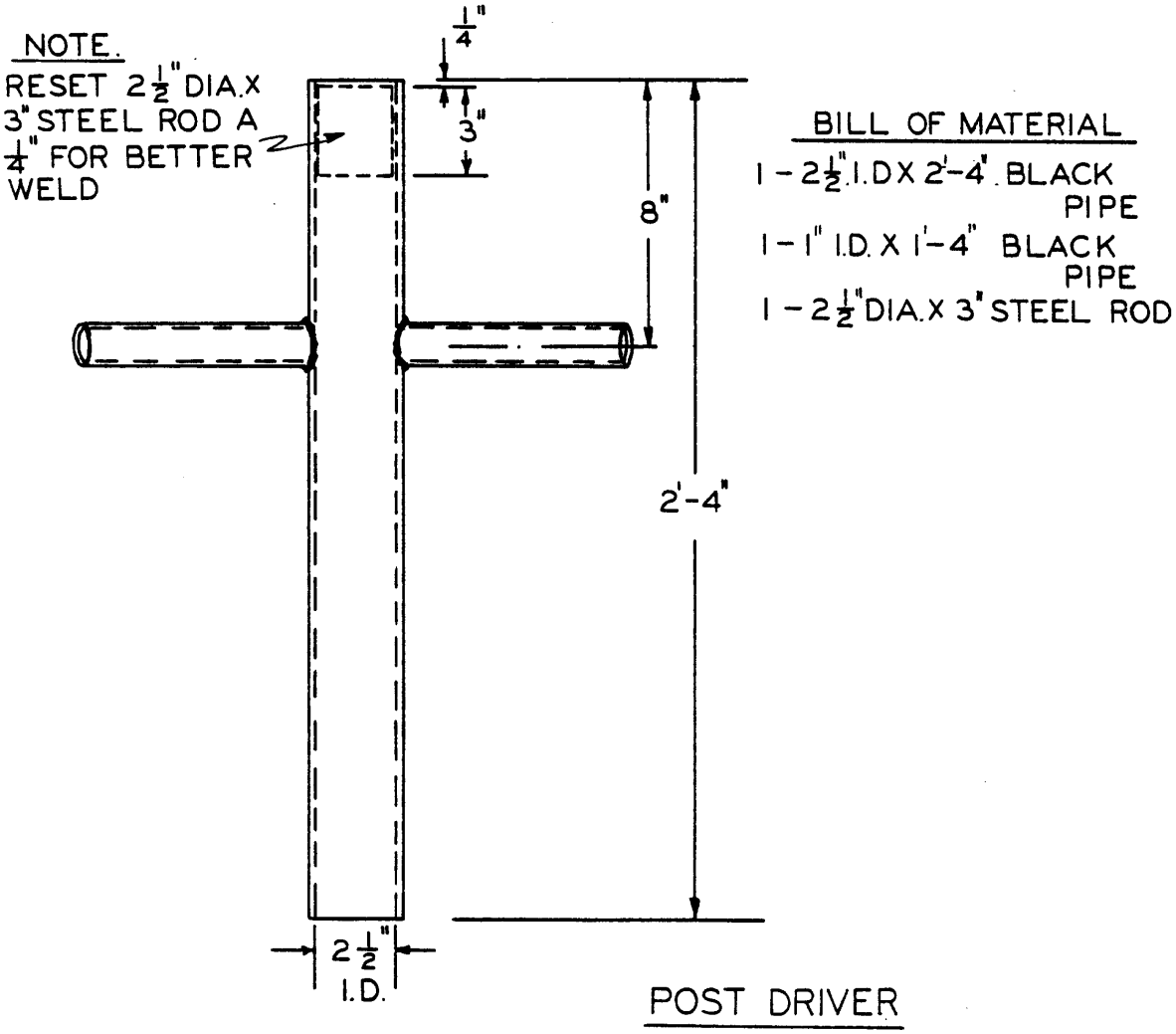
NOTE.
RESET 2½" DIA.X 3" STEEL ROD A ¼" FOR BETTER WELD
¼"
3"
8"
2'-4"
2½" I.D.
BILL OF MATERIAL
1 - 2½" I.D X 2'-4" BLACK PIPE
1 - 1" I.D. X 1'-4" BLACK PIPE
1 - 2½" DIA. X 3" STEEL ROD
POST DRIVER

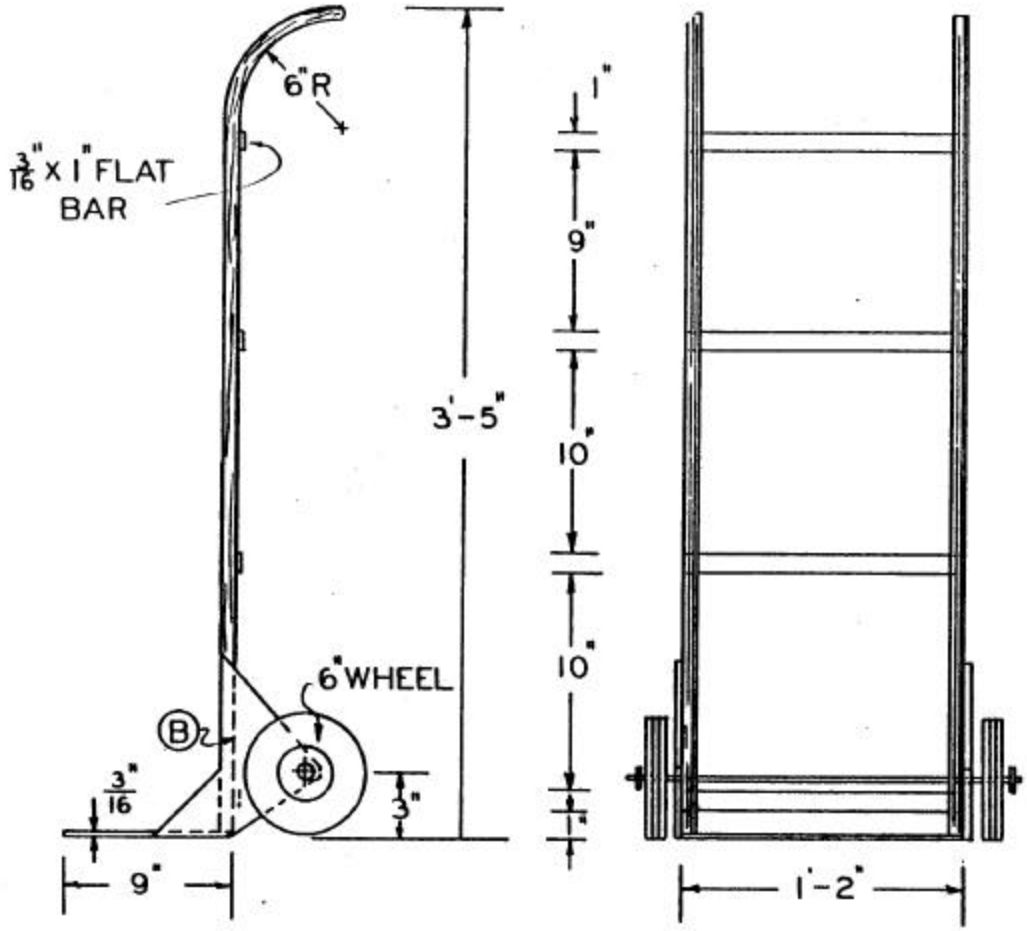

TRANSPORT CART

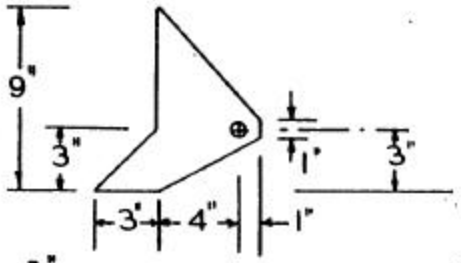

3/16" FLAT PLATE, DETAIL (B)

BILL OF MATERIAL

3/4" X 8'-0" BLACK PIPE
3/16" X 1" X 4'-8" HOT ROLLED FLAT BAR
3/16" X 9" X 1'-10" HOT ROLLED PLATE
1/2" X 1'-10" COLD ROLLED ROUND
2 - 6" HARD RUBBER WHEELS

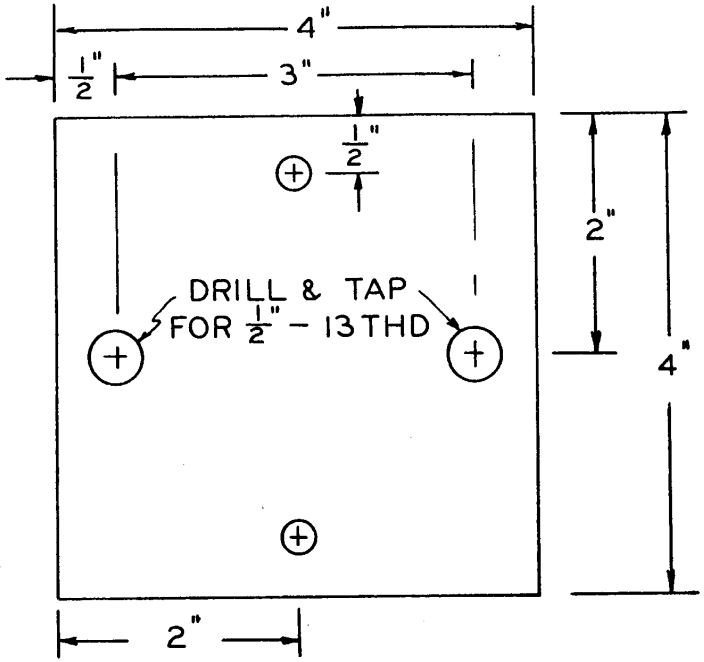

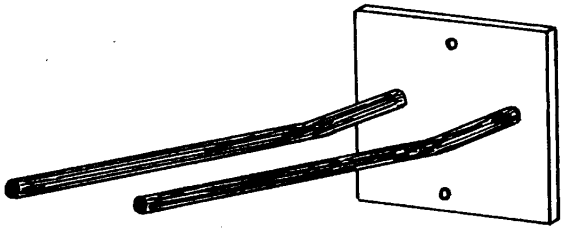

BILL OF MATERIAL

1 - 3/8" X 4" X 4" STEEL PLATE

1 - 1/2" DIA. X 2'-0" MILD STEEL ROD

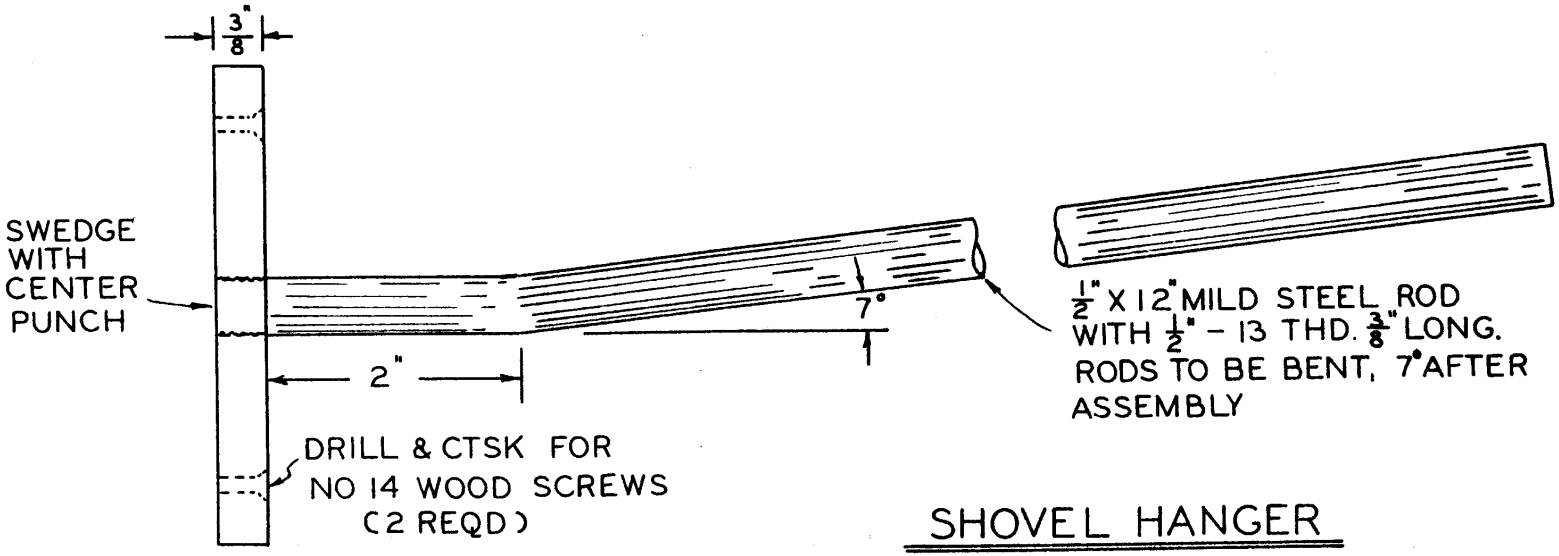

SHOVEL HANGER

SHARPENING PRUNING SHEARS WITH CUTTER BARS

Order No. 708

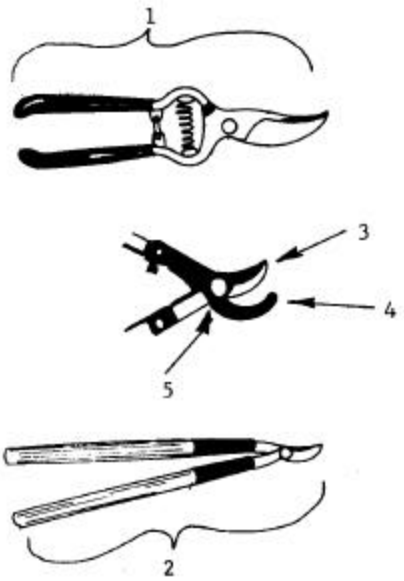

Part Identification:

1. _____ 4. _____
2. _____ 5. _____
3. _____

Procedure:

1. Disassemble shears or loppers.
2. Use a round face stone for the cutter bar.
3. Hold the cutter bar at a slight angle to undercut the edge of the bar that contacts the cutting blade.
4. Hone the flat surface of the cutter bar to remove wire bead.
5. If the cutting blade is nicked, joint it.
6. Hold the cutting blade so the face of the stone rotates into the cutting edge.
7. Grind the desired bevel by moving cutting blade back and forth so as not to overheat any one spot. Use a light pressure against the grinding wheel.
8. After grinding remove the wire bead by honing with a stone. Draw stone across the edge once or twice.
9. Reassemble blades and if they do not continually rub together at point of contact, it may be necessary to slightly spring the cutter bar.
10. Clean and oil lightly.

Operation Teaches: Ability to . . . . . .

1. A. Describe the importance of sharpness in pruning shears.
2. A. Sharpen and undercut cutter bar.
3. A. Joint cutting blade.
4. A. Remove wire bead.
5. A. Adjust pruning shear blades.

Evaluation Score Sheet:

Item	Points Possible	Points Earned
1. Part identification	15	_____
2. Removal of nicks	15	_____
3. Sharpness of cutting blade	15	_____
4. Angle and uniformity of blade	15	_____
5. Sharpness of cutting bar	15	_____
6. Use of tools	15	_____
7. Safety and work habits	10	_____
Total	100	_____

Materials:

1. Safety glasses
2. Dull pruning shears
3. Bench grinder
4. Oilstone
5. Emery cloth and oil
6. Container of water

NAME: _____

DATE: _____

GRADE: _____

HOBAR PUBLICATIONS

1305 Tiller Lane St. Paul, Minnesota 55112

SHARPENING AND ADJUSTING GRASS AND HEDGE SHEARS

Order No. 707

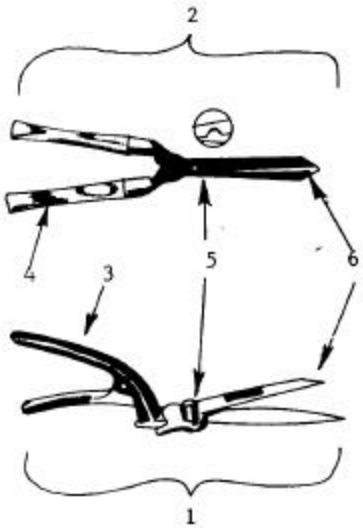

Part Identification:

1. _____ 4. _____
2. _____ 5. _____
3. _____ 6. _____

Procedure:

1. Separate blades, open completely, and put one blade in the vise with flat side up and towards you.
2. If nicked or extremely dull, use file. File against edge of blade moving from base to tip. Retain original angle or about 15° to 20° from flat side of blade.
3. Remove wire edge with oilstone by laying stone flat against inside of blade and drawing stone across cutting edge once or twice.
4. Hone bevel until edge appears sharp.
5. Reassemble and tighten screw.
6. Cut a wet paper the full length of the shear. If tearing occurs, hone dull area and test again.
7. Remove rust and dirt with emery cloth and oil.
8. Oil pivot screw and entire length of blades and hang up for safe storage.

Operation Teaches: Ability to . . . . . .

. A. Describe the types of shears and list their uses.
2. A. Define the importance of properly sharpened tools.
3. A. Use file, stone and vise.
4. A. Properly sharpen a shears.
5. A. Properly adjust a shears.
6. A. Properly oil a shears.
7. A. Properly store a shears.

Evaluation Score Sheet:

Item	Points Possible	Points Earned
1. Part identification	12	_____
2. Removal of nicks	16	_____
3. Uniformity of bevel	16	_____
4. Tension of blades	16	_____
5. Blades free from rust & dirt	15	_____
6. Use of tools	15	_____
7. Safety and work habits	10	_____
Total	100	_____

Materials:

1. Safety glasses
2. Dull grass or hedge shears
3. File
4. Oilstone
5. Wet newspaper
6. Light oil

NAME: _____

DATE: _____

GRADE: _____

HOBAR PUBLICATIONS

1305 Tiller Lane St. Paul, Minnesota 55112

SHARPENING HOES

Order No. 706

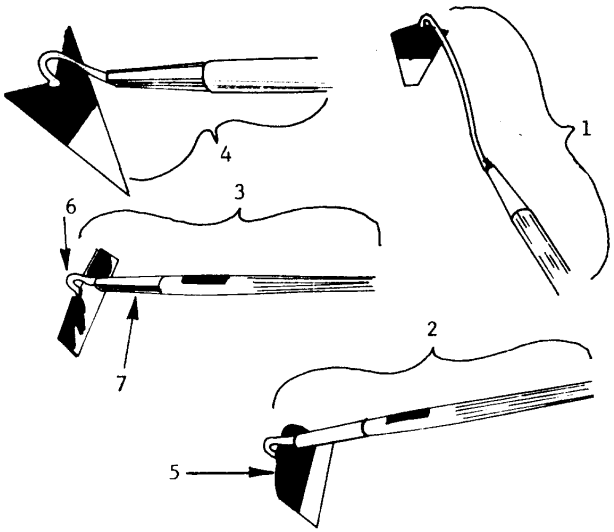

Part Identification:

1. _____ 5. _____
2. _____ 6. _____
3. _____ 7. _____
4. _____

Procedure:

1. Inspect cutting edge. Remove nicks with the bench grinder.
2. Clamp shank in vise with handle on floor.
3. File edge on the forward stroke.
4. Hold file at a 45° angle to side of hoe and take long steady strokes along the entire length of the edge.
5. Cutting edge should be filed to 30° angle for ordinary work. A lesser angle if used for cutting weeds.
6. Remove wire edge with a file.
7. Test for sharpness.
8. If rusty, polish with emery cloth and oil.
9. Oil or grease surface of blade.
10. Store out of weather, and where it will not cause injury by falling or hitting people in the area.

Operation Teaches: Ability to . . . . . .

. A. Define types of hoes and their uses.
2. A. Describe the importance of proper sharpening and storing of hoes.
3. A. Identify different hoes and parts of a hoe.
4. A. Use a bench grinder.
5. A. Use a file and vise.
6. A. Properly sharpen a hoe.
7. A. Maintain a uniform bevel.
8. A. Properly clean and store a hoe.

Evaluation Score Sheet:

Item	Points Possible	Points Earned
1. Part identification	14	_____
2. Removal of nicks	10	_____
3. Sharpness of blade	20	_____
4. Uniformity of bevel	20	_____
5. Blade free of rust & dirt	15	_____
6. Use of file and vise	10	_____
7. Safety and work habits	11	_____
Total	100	_____

Materials:

1. Safety glasses
2. Hoe
3. Bench grinder
4. Flat file
5. Emery cloth and oil

NAME: _____

DATE: _____

GRADE: _____

HOBAR PUBLICATIONS

1305 Tiller Lane St. Paul, Minnesota 55112

FITTING A SHOVEL HANDLE

Order No. 705

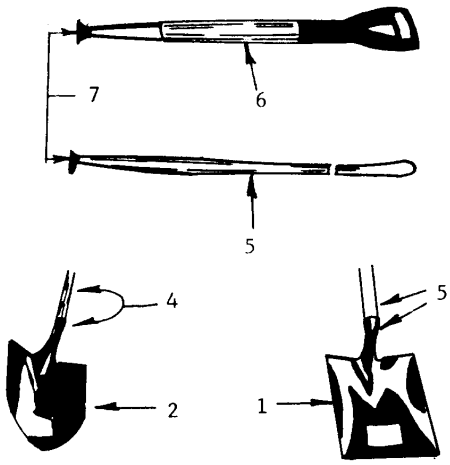

Part Identification:

1. _____ 5. _____
2. _____ 6. _____
3. _____ 7. _____
4. _____

Procedure:

1. Select a handle that has the correct bend. It is a good practice to take the shovel along when purchasing a new handle.
2. Remove the old handle as follows:
   a. Place in vise.
   b. Chisel off the heads of the rivets.
   c. Drive out old rivets.
   d. Drill holes into wood remaining in the ferrule.
   e. Spread the ferrule.
   f. Drive out old handle.
3. Shape the handle to fit the ferrule by placing it in a vise and using a rasp, file or plane.
4. Drive the handle into place by striking the end of the handle while holding handle and shovel in the air.
5. Be sure the shovel hangs true and does not tilt to the right or left.
6. Drill the hold and drive in first rivet.
7. Hammer the first rivet before drilling holes for other rivets.
8. Insert and secure final rivets.

Operation Teaches: Ability to . . . . . .

A. Select the correct size and shape of replacement handles.
2. A. Remove old rivets and handle from shovel ferrule.
3. A. Shape wood handle to fit particular ferrule.
4. A. Properly hang a shovel.
5. A. Fit and hammer rivets.

Evaluation Score Sheet:

Item	Points Possible	Points Earned
1. Part identification	14	_____
2. Selection of handle	15	_____
3. Hang of shovel	15	_____
4. Fit of handle	15	_____
5. Finish of rivets	15	_____
6. Use of tools	15	_____
7. Safety and work habits	11	_____
Total	100	_____

Materials:

1. Safety glasses
2. New handle and rivets
3. Broken shovel
4. Wood rasp and plane

NAME: _____

DATE: _____

GRADE: _____

HOBAR PUBLICATIONS

1305 Tiller Lane St. Paul, Minnesota 55112

SHARPENING A SPADE OR SHOVEL

Order No. 704

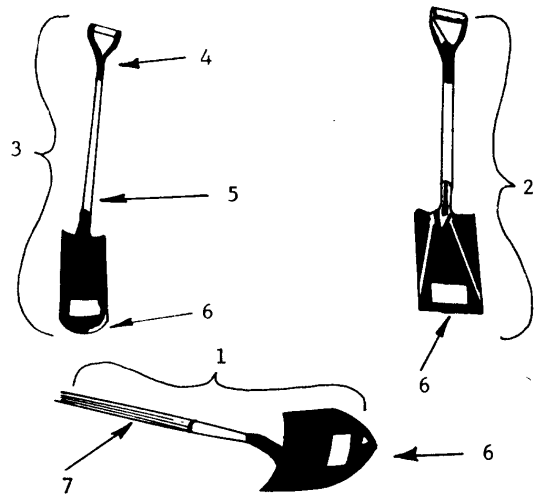

Part Identification:

1. _____ 5. _____
2. _____ 6. _____
3. _____ 7. _____
4. _____

Procedure:

1. Long heavy-bladed spades and shovels are best sharpened on a bench grinder. Light-weight spades and shovels can be sharpened with a file.
2. Check the spade and shovel blade for disproportionate wear. Joint if necessary.
3. Position spade or shovel to grind on the inside of the blade only.
4. Grind the cutting edge to form a bevel.
5. Keep the blade moving steadily back and forth across the wheel. Do not use excessive pressure.
6. Dip the blade into water to prevent overheating. Overheating destroys the temper in the metal.
7. Removal of the wire bead is not necessary but can be done if desired with a flat file.
8. Clean and polish with steel wool or emery cloth. Apply a light coat of oil.

Operation Teaches: Ability to . . . . . .

1 A. Outline the importance of a properly sharpened spade or shovel.
2. A. Select the correct procedure for sharpening a spade or shovel.
3. A. Joint an out-of-shape spade or shovel.
4. A. Grind a bevel on a spade or shovel.
5. A. Sharpen without losing the temper from the blade of a spade or shovel.
6. A. Clean and store a spade or shovel.

Evaluation Score Sheet:

Item	Points Possible	Points Earned
1. Part identification	14	_____
2. Proper shape of blade	15	_____
3. Sharpness of blade	15	_____
4. Evidence of overheating	15	_____
5. Degree and uniformity of bevel	15	_____
6. Use of tools	15	_____
7. Safety and work habits	11	_____
Total	100	_____

Materials:

1. Safety glasses
2. Bench grinder
3. Dull spade or shovel
4. File
5. Steel wool or emery cloth and oil
6. Container of water

NAME: _____

DATE: _____

GRADE: _____

HOBAR PUBLICATIONS

1305 Tiller Lane St. Paul, Minnesota 55112

SHARPENING AN AX OR HATCHET

Order No. 703

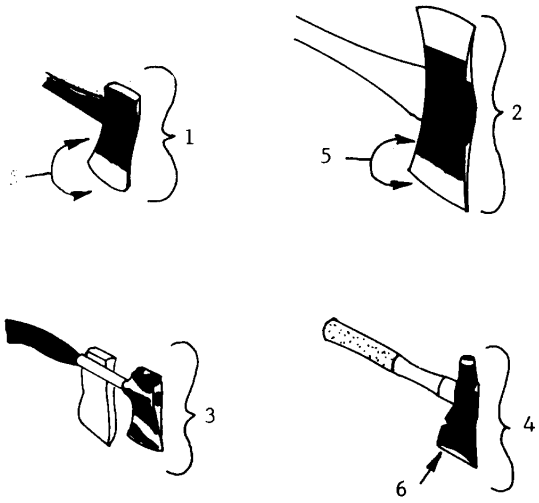

Part Identification:

1. _____ 4. _____
2. _____ 5. _____
3. _____ 6. _____

Procedures:

1. Inspect the edge. Determine the amount of grinding necessary.
2. Check the balance. Place cutting edge and handle on flat surface. The blade should touch the surface about 2/3 of the way from the fore edge of the blade.
3. If blade is out of balance it may be jointed. Joint by laying the blade flat on the tool rest and pointed towards the grinding stone.
4. Grind the fan-shaped bevel. This will be much higher on a cutting ax than a splitting ax.
5. Grind the short bevel on each side of the cutting edge. The grinding wheel turns towards the cutting edge to prevent forming a wire edge. Prevent overheating by using light pressure and cooling the ax in water.
6. Hone the edge with an oilstone. The ax is held in one hand and stone moved with the other hand.

Operation Teaches: Ability to . . .

1. A. Describe the difference between a cutting and splitting ax and between hatchets.
2. A. Balance an ax.
3. A. Joint an ax.
4. A. Grind fan-shaped bevel.
5. A. Grind short bevel.
6. A. Hone the edges with an oilstone.

Evaluation Score Sheet:

Item	Points Possible	Points Earned
1. Part identification	12	_____
2. Removal of nicks	10	_____
3. Sharpness of blade	30	_____
4. Uniformity of bevel	15	_____
5. Balance of ax	15	_____
6. Use of grinder & stone	10	_____
7. Safety & work habits	8	_____
Total	100	_____

Materials:

1. Safety glasses
2. Bench grinder
3. Oilstone
4. Dull ax or hatchet
5. Container of water

NAME: _____

DATE: _____

GRADE: _____

HOBAR PUBLICATIONS
1305 Tiller Lane St. Paul, Minnesota 55112

SHARPENING A KNIFE

Order No. 702

Pruning Knife

Grafting Knife

Operation Teaches: Ability to . . . . . .

A. Discuss the value of a sharp pruning knife.
2. A. Inspect a blade.
3. A. Grind a blade.
4. A. Hone with an oilstone.
5. A. Test for sharpness.
6. A. Strop the edge of a knife.

Procedure:

1. Inspect the blade to determine its condition. If nicked, it needs to be ground or dressed on a grinding wheel.

2. Grind the blade: Hold the blade flat on the surface of the wheel. The blade should be held so that the wheel turns into the cutting edge. Caution! Press very lightly on the blade while grinding. Dip the blade in cold water frequently to prevent it from becoming overheated resulting in a loss of temper. The metal in the thin blade burns quickly if too much pressure is used.

3. Hone the blade on an oilstone. Oil the stone and lay the blade flat on the stone and move it over the surface toward the cutting edge. Lift the blade at the end of each stroke; turn it over and hone the other side on the return stroke.

4. Test for sharpness: Wipe off the oil with a cloth and test the blade by running thumb lightly along the edge. If it feels smooth, yet pulls a little, it is sharp. Be sure that it is sharp along the entire length.

5. Strop the edge on the smooth surface of a piece of leather. This is not necessary unless an especially keen edge is desired. In stropping, move the blade over the leather away from the cutting edge.

Evaluation Score Sheet:

Item	Points Possible	Points Earned
1. Removal of nicks	15	_____
2. Angle of bevel	15	_____
3. Uniformity of bevel	15	_____
4. Sharpness of blade	30	_____
5. Use of tools	15	_____
6. Safety and work habits	10	_____
Total	100	_____

Materials:

1. Safety glasses
2. Dull pruning knife
3. Fine grained grinding wheel
4. Oilstone
5. Stropping leather
6. Light weight oil
7. Container of water

NAME: _____

DATE: _____

GRADE: _____

HOBAR PUBLICATIONS

1305 Tiller Lane St. Paul, Minnesota 55112