# All Purpose Blade

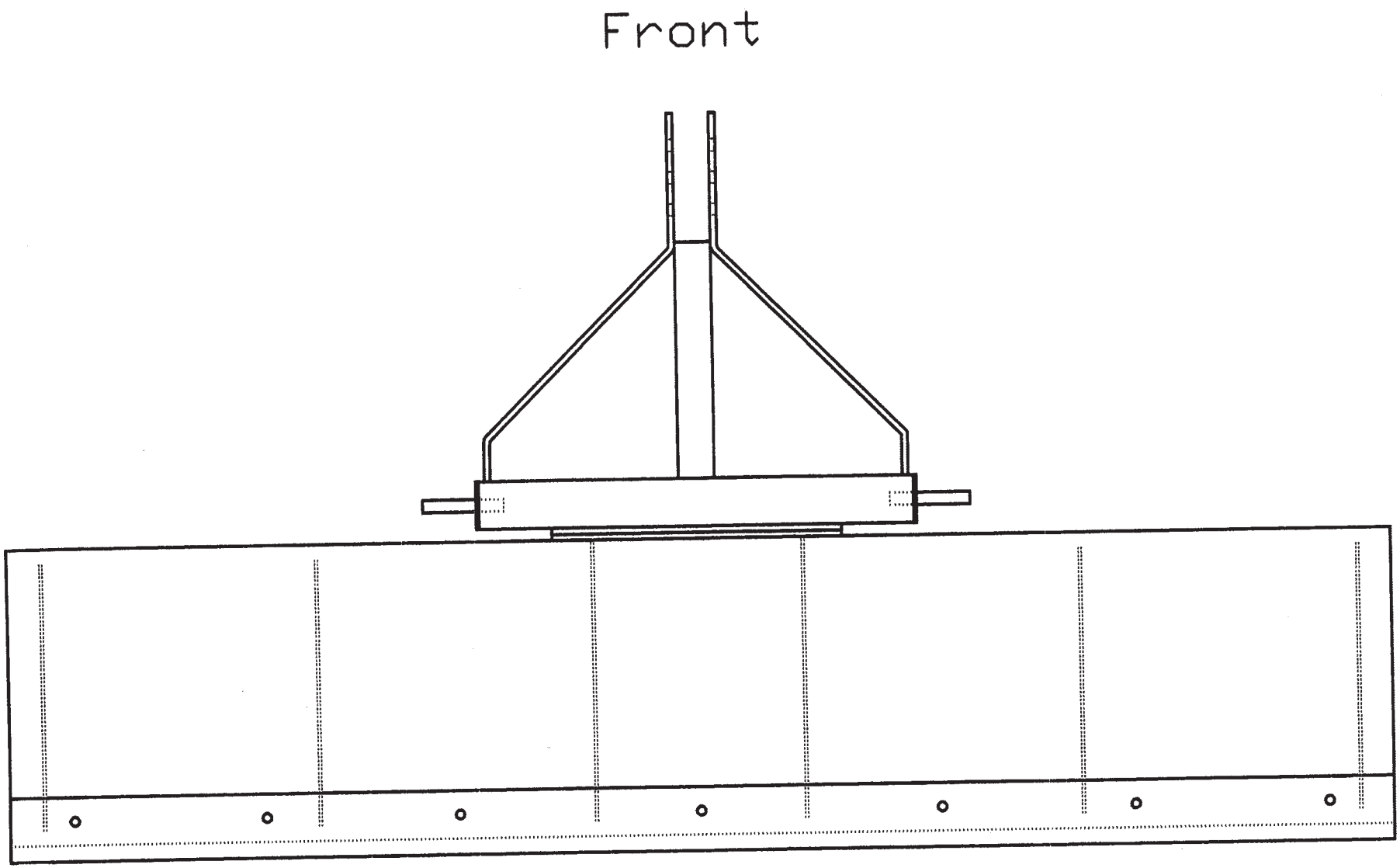

**All Purpose Blade**

Back

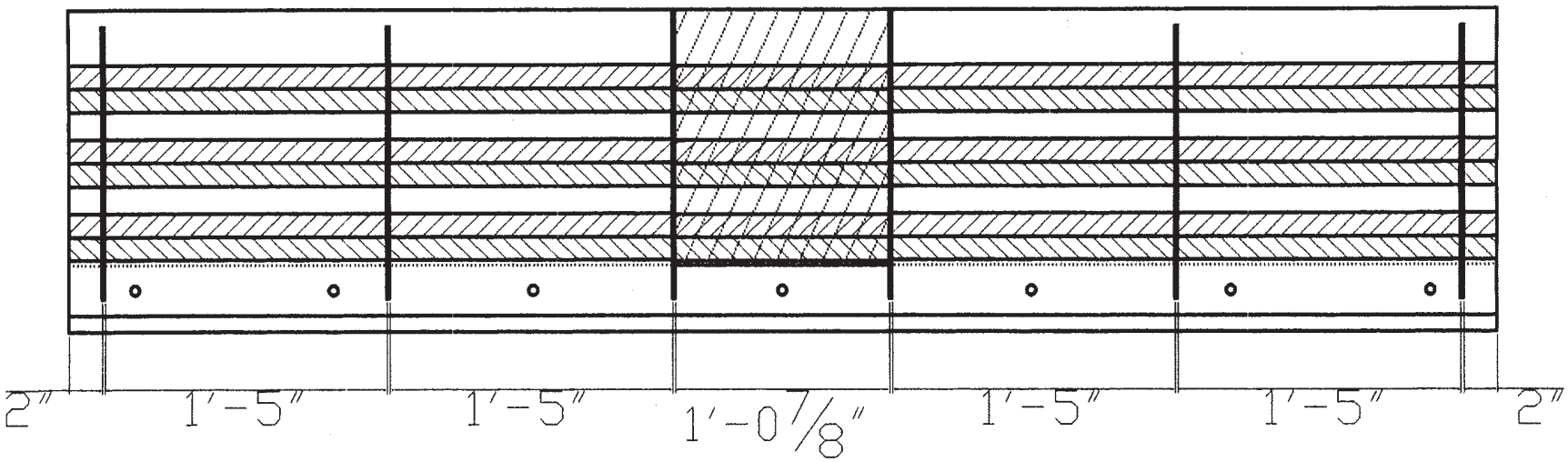


Top

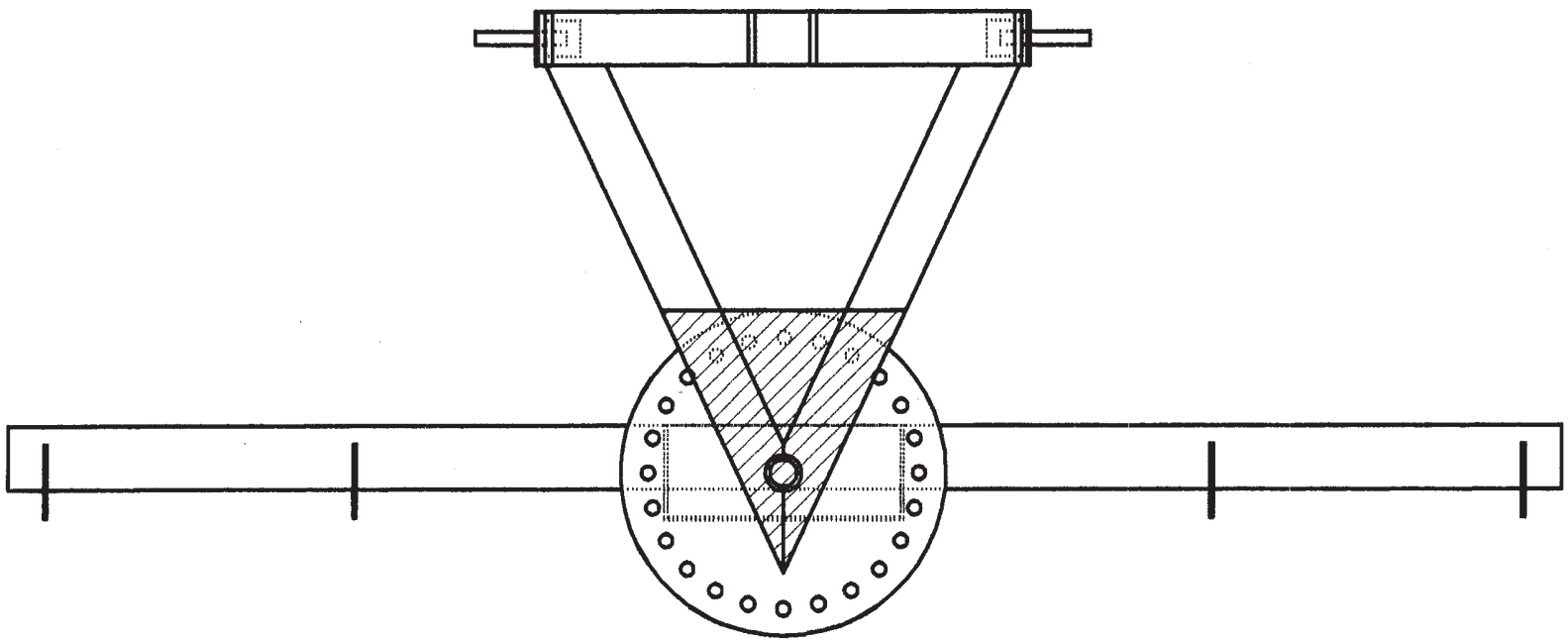

# All Purpose Blade

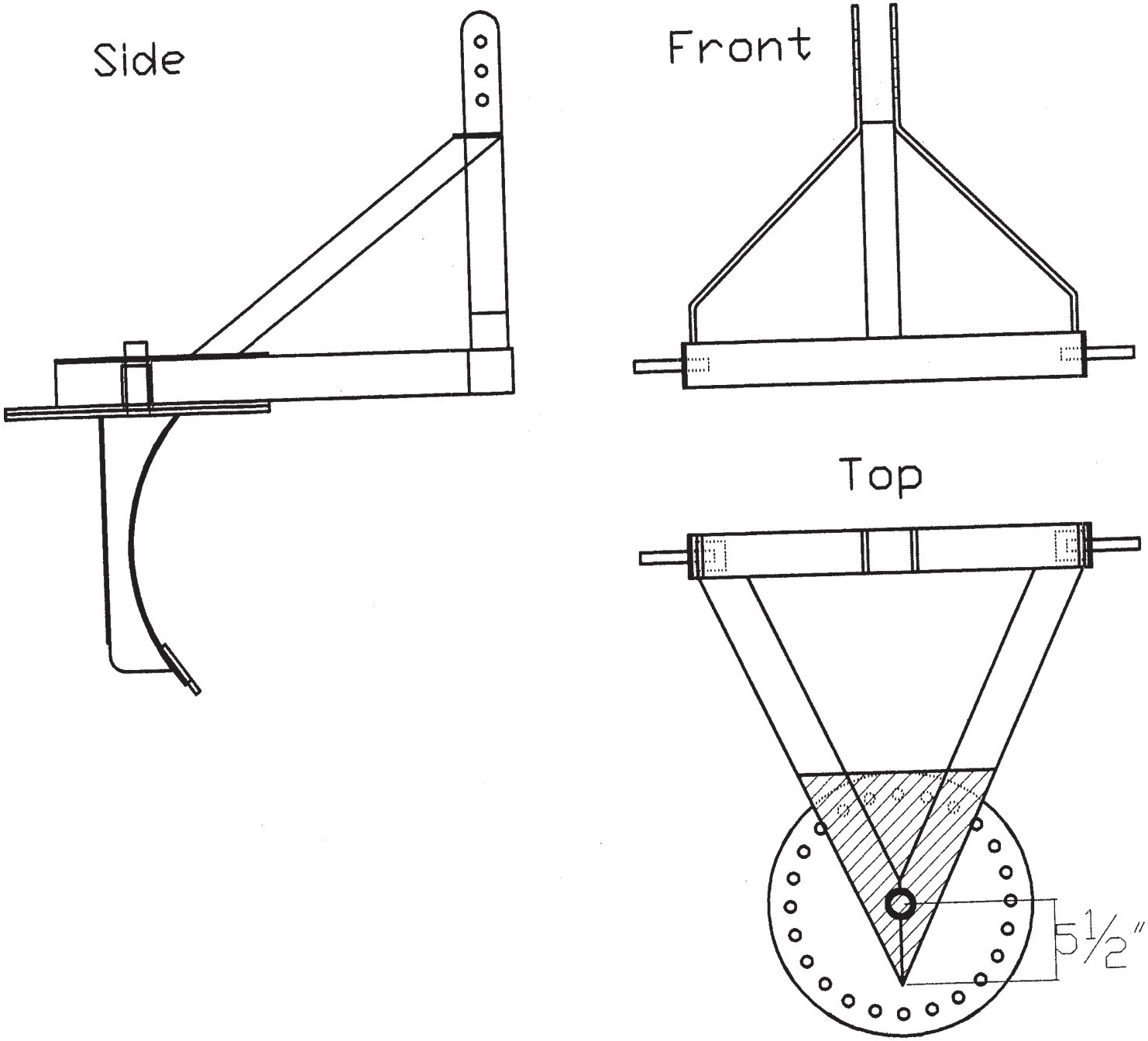

# All Purpose Blade

## Adjustable Disc

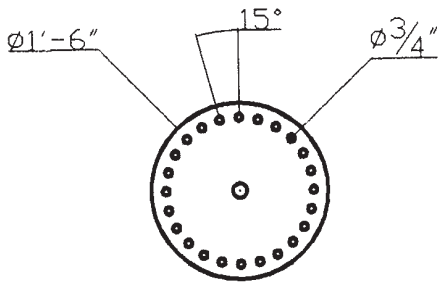


## Front Tube

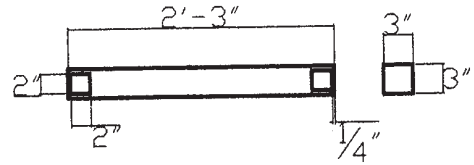


## Angled Tubes

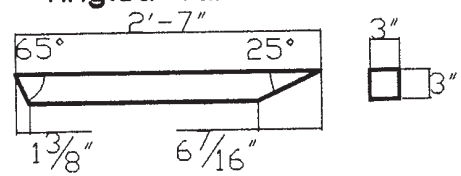


## Swivel Pin and Pipe

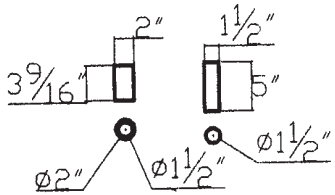


## Hitch

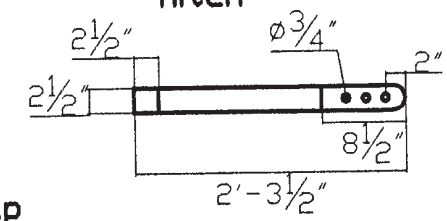


## Alloy Pin

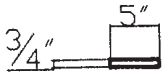


## End Cap

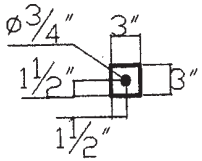


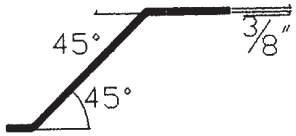


## Support Tube Cap

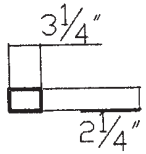


## Support Tube

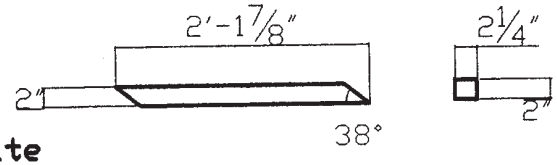


## Triangle Plate

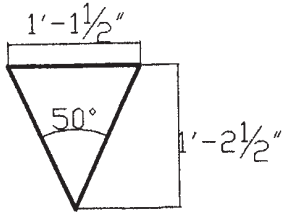


Materials:

- 2 - Blades (Weld Together)
- 1 - Back Plate
- 4 - Short Blade Supports
- 2 - Large Blade Supports
- 12 - 1'-5" Linial Supports
- 3 - 1'-7/8" Linial Supports
- 6 - 2" Linial Supports
- 1 - Blade Plate
- 2 - Adjustable Discs
- 1 - Front Tube
- 2 - Angled Tubes
- 1 - Swivel Pin
- 1 - Swivel Pipe
- 2 - Alloy Pins
- 2 - End Caps
- 1 - Support Tube Cap
- 1 - Triangle Plate
- 2 - Hitch Bars
- 1 - Support Tube

# All Purpose Blade

## Blade

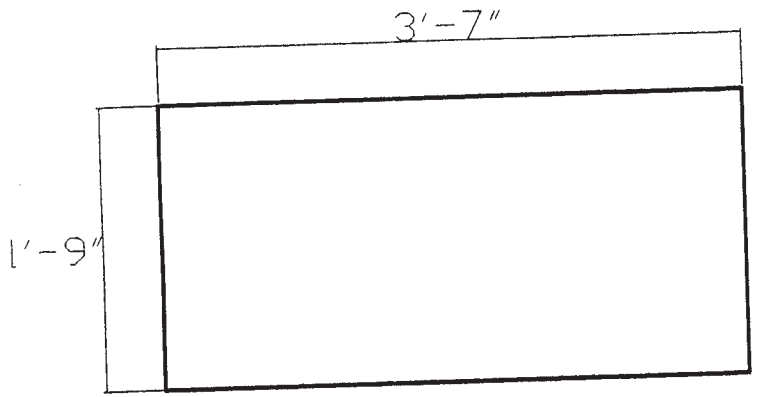


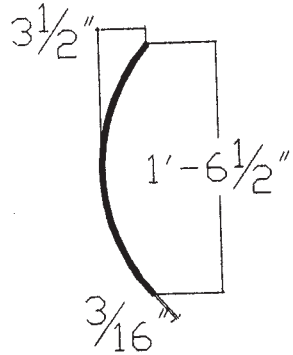


## Back Plate

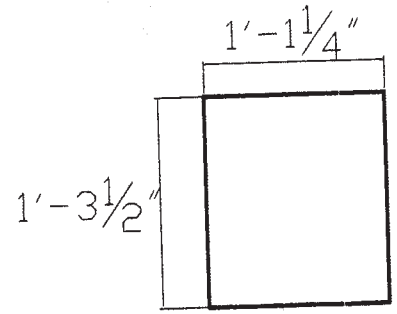


## Blade Supports

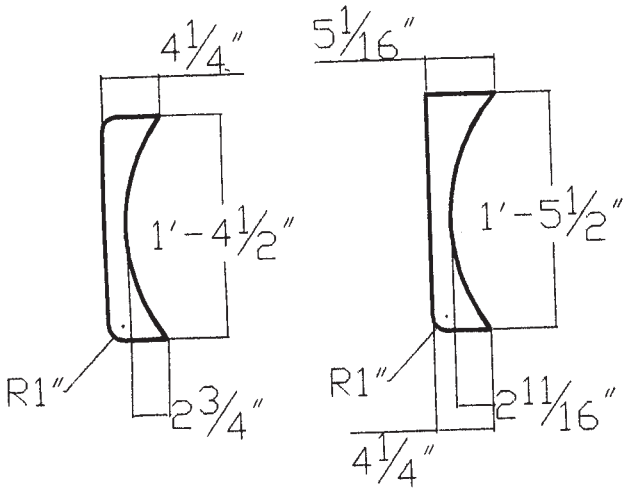


## Iinial Supports

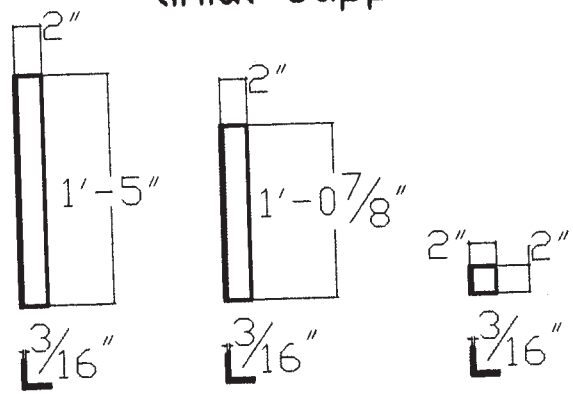

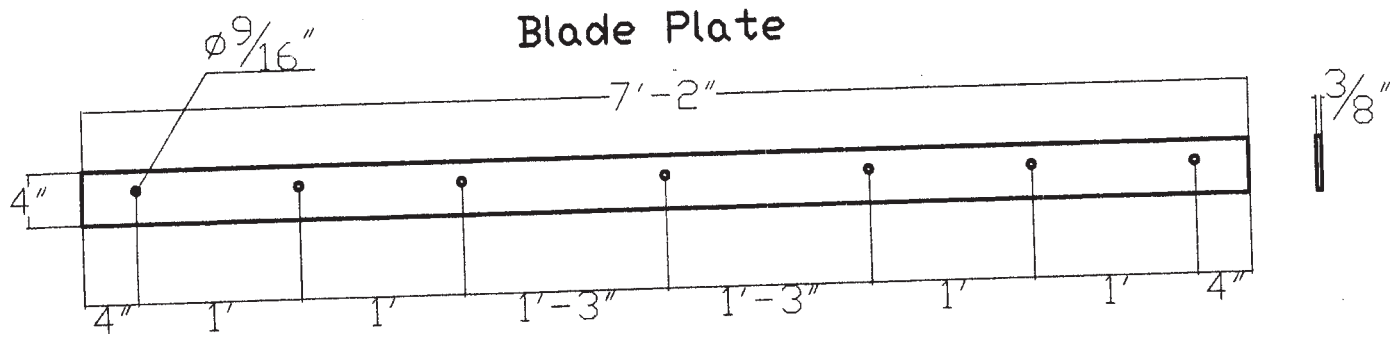
## Blade Plate