All Purpose Trailer

Scale: 1/2"=1'

NOTE: CENTER OF AVELS ARE LOCATED
1/2" BACK OF CENTER FOR EVERY
FOOT OF LENGTH

TOTAL LENGTH: 12'
TOTAL WIDTH: 7'6"

NOTE: 1/8" SHEET METAL SIDES
1/8" SHEET METAL FENDERS

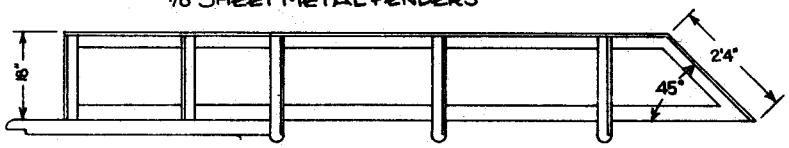

SIDE VIEW

BILL OF MATERIAL

- 4 Pieces of 3" Angle Iron 10'1" Long
- 4 Pieces of 3" Angle Iron 3' Long
- 2 Pieces of 3" Angle Iron 2" Long
- 4 Pieces of 3" Angle Iron 6'2" Long
- 1 Piece of 3" Angle Iron 6' Long
- 10 Pieces of 3" Angle Iron 17 1/2" Long
- 2 Pieces of 3" Angle Iron 2'4" Long
- 2 Pieces of 1/8" Sheetmetal 7' X 8 1/2"
- 2 Pieces of 1/8" Sheetmetal 2'4" X 8 1/2"
- 2 Pieces of 1/8" Sheetmetal 1'11" X 8 1/2"
- 6 - 2" X 12" X 11'9" Boards
- 2 Pieces of 1/2" Sheetmetal 7'9" X 17"
- 2 Pieces of 1/8" Sheetmetal 3' X 17"
- 1 Piece of 1/8" Sheetmetal 2' X 17"

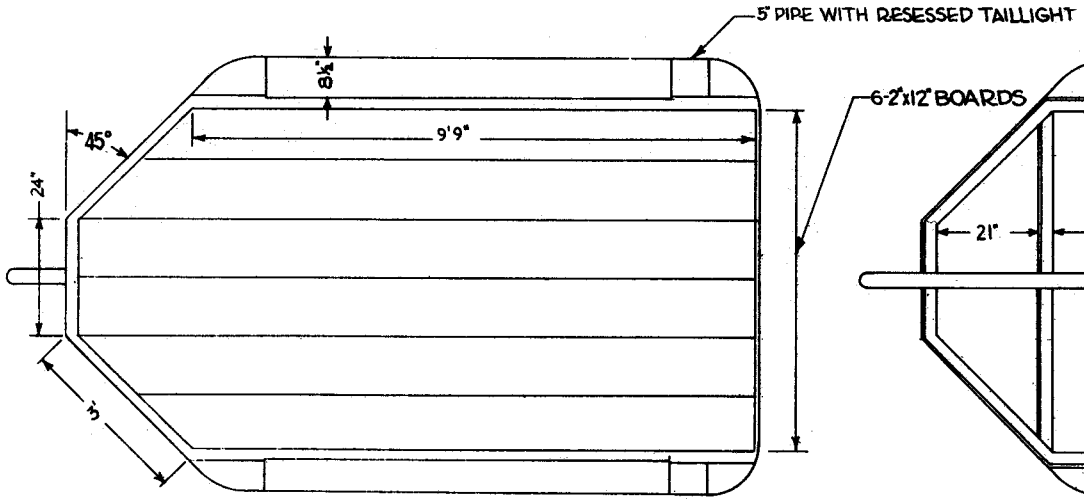

TOP VIEW

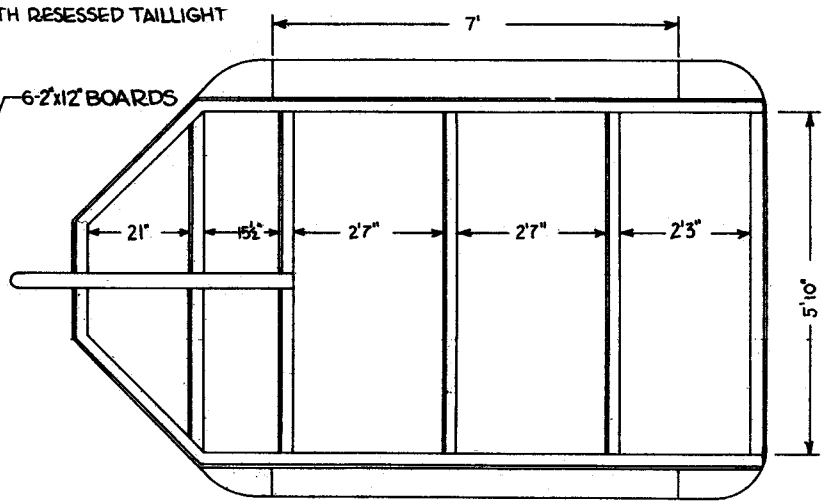

BOTTOM FRAME VIEW

Curriculum and Instructional Materials Center
State Department of Vocational and Technical Education
Stillwater, Oklahoma

NOTE: ALL FRAME WORK-3" ANGLE IRON

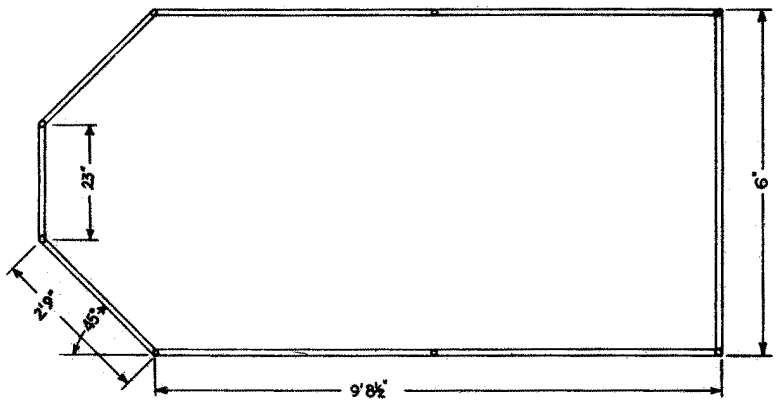

BILL OF MATERIAL

8 Pieces of 1" Pipe 5" Long
2 Pieces of 1" Pipe 4'1" Long
2 Pieces of 1" Pipe 4'6" Long
6 Pieces of 1" Pipe 17" Long
5 Pieces of 1" Pipe 1'2" Long
9 Pieces of 1" Pipe 23" Long
18 Pieces of 1" Pipe 2'9" Long
36 Pieces of 1" Pipe 4'9" Long
2 Pieces of 1" Pipe 5'10" Long
2 Pieces of 1" Pipe 2'7" Long
14 Pieces of 1" Pipe 17" Long
6 Pieces of 1" Pipe 2'5" Long
1 Piece of 1" Pipe 8 1/2" Long
2 Pieces of 1" Pipe 37" Long
2 Pieces of 1" Pipe 4" Long
1 Piece of 1" Pipe 7" Long
3 Pieces of 1 1/2" Pipe 3" Long
4 Pieces of 1 1/2 Pipe 1 1/2" Long

NOTE: RACKS ARE HELD IN WITH SPRING LOADED BOOMERS

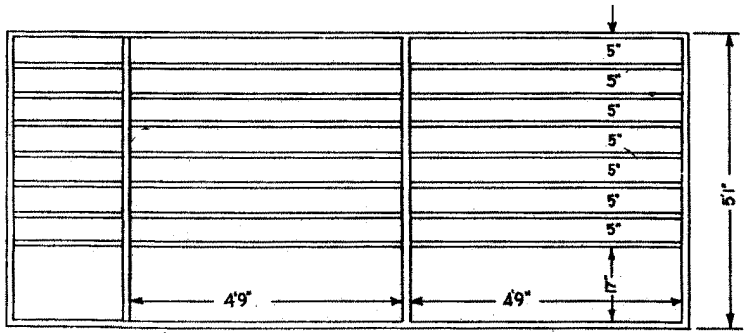

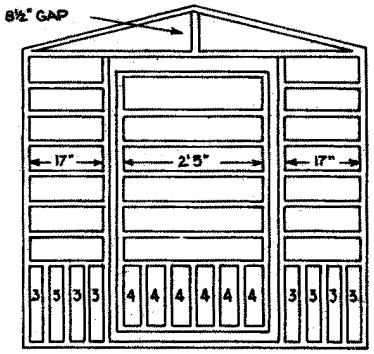

GATE OUTSIDE MEASUREMENTS 4'6" X 2'7"