Barrel Feeder

Scale: ½" = 1'

BILL OF MATERIAL
2 PIECES OF 1½" ANGLE IRON 9'8½" LONG
2 PIECES OF 1½" ANGLE IRON 4' LONG
9 PIECES OF 1½ PIPE 24" LONG
3 - 55 GAL BARREL HALVES

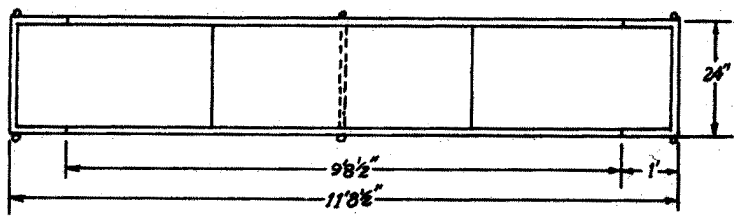

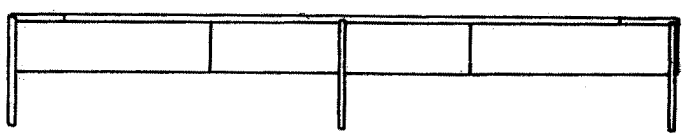

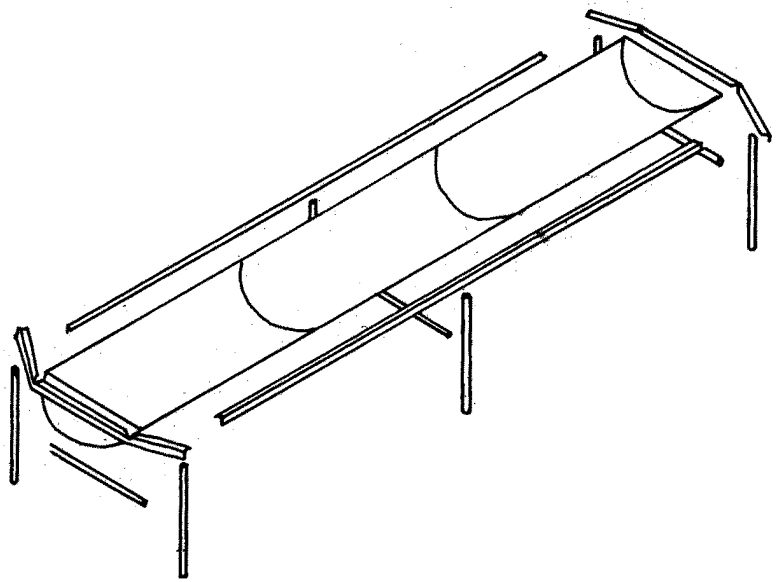

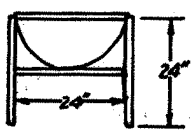

Courtesy of Jet-Nash
Vocational Agriculture Department

Curriculum and Instructional Materials Center
State Department of Vocational and Technical Education
Stillwater, Oklahoma

DWN BY: JOHN McEACHERN