Bottle Cart

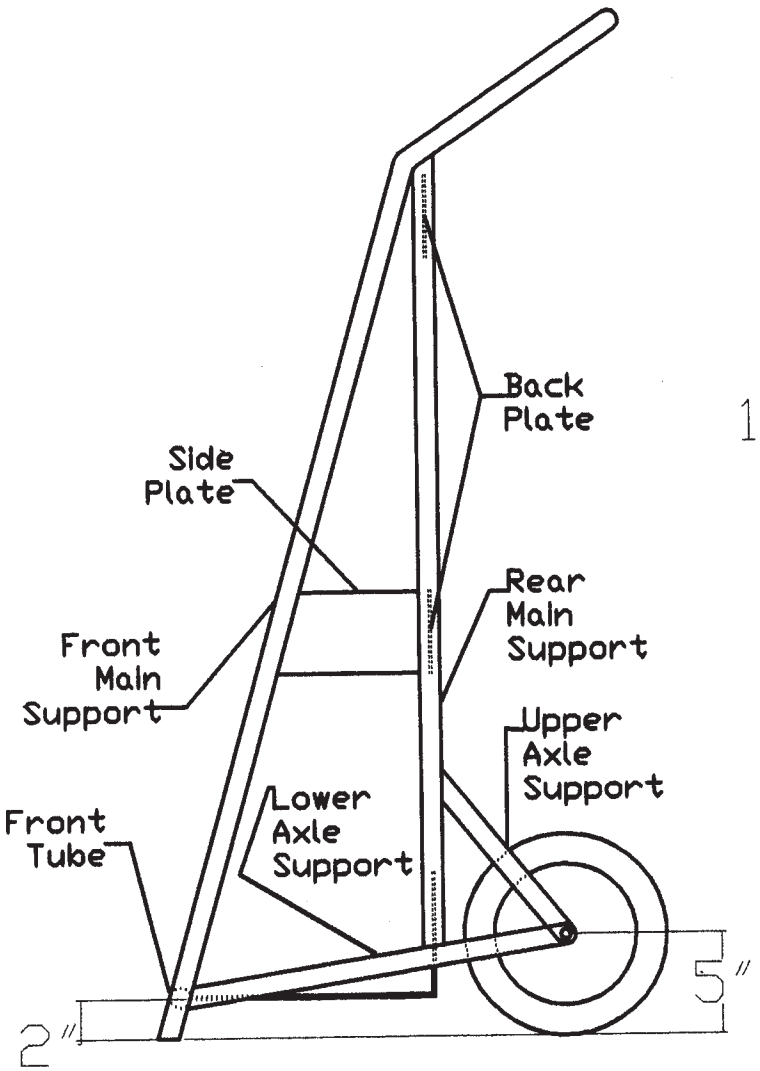
Back Plate
Side Plate
Rear Main Support
Front Main Support
Upper Axle Support
Lower Axle Support
Front Tube
5"
2"

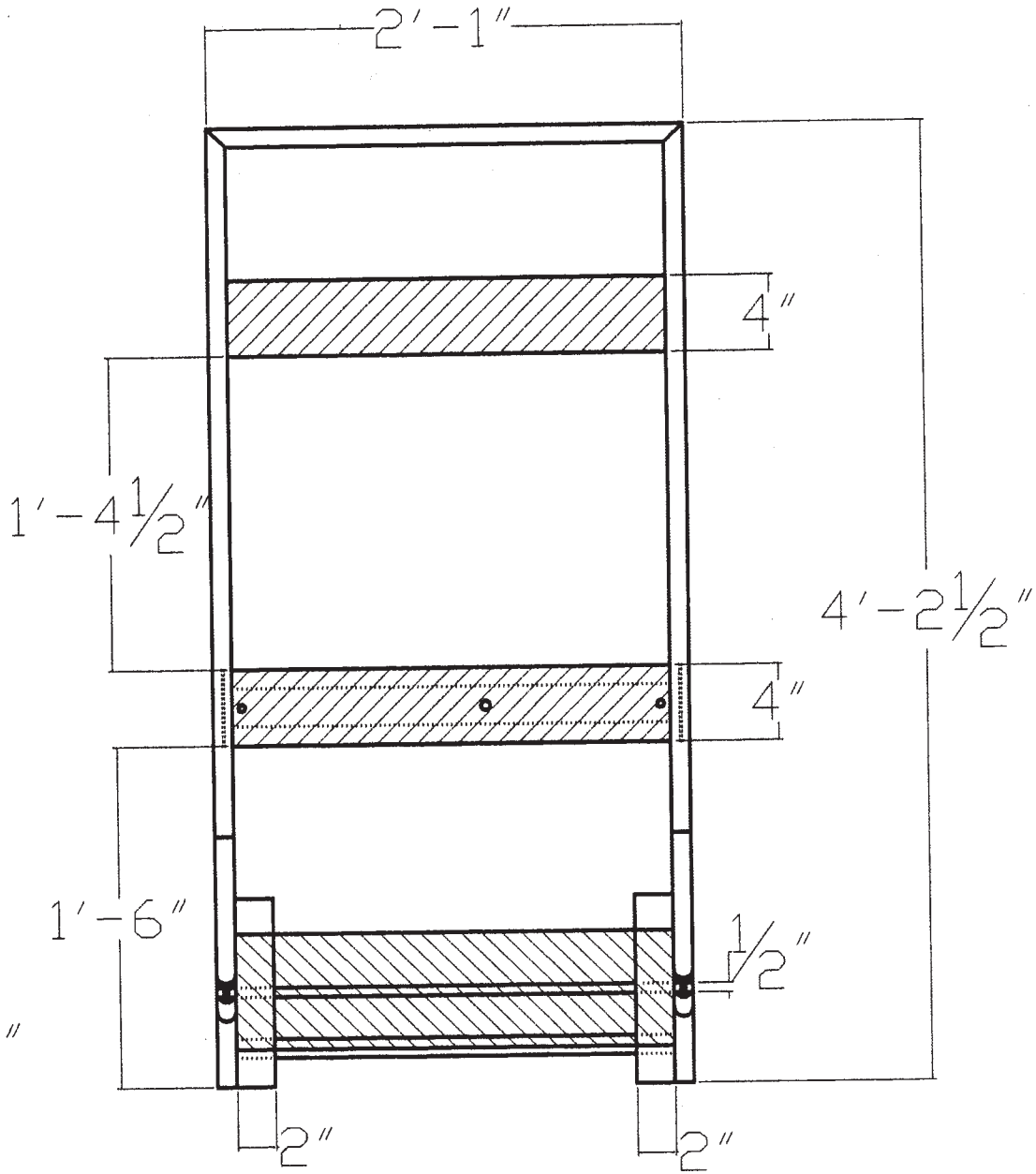
2'-1"
4"
1'-4 1/2"
4'-2 1/2"
4"
1'-6"
1/2"
2"
2"

Bottle Cart

Materials:
1 - Front Tube
1 - Handle Bar
2 - Front Main Supports
2 - Rear Main Supports
2 - Upper Axle Supports
2 - Lower Axle Supports
2 - Side Plates
2 - Back Plates
1 - Cradle
1 - Lower Back Plate
1 - Bottom Plate
1 - Axle
2 - Wheels

Cradle

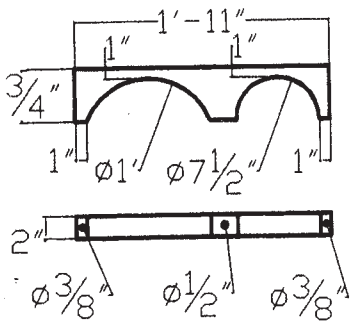

Lower Axle Support

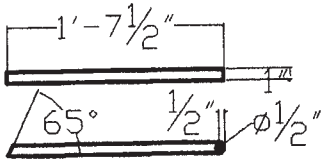

Back Plate

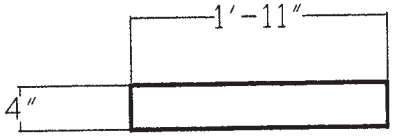

Front Tube

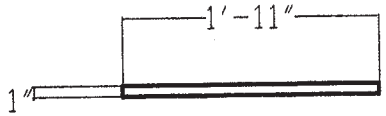

lower Back Plate

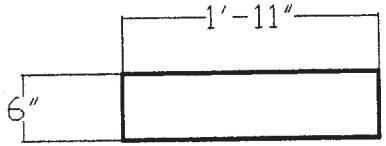

Bottom Plate

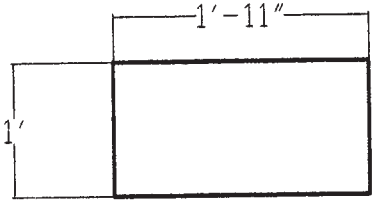

Upper Axle Support

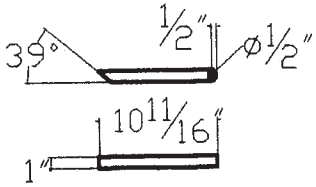

Handle Bar

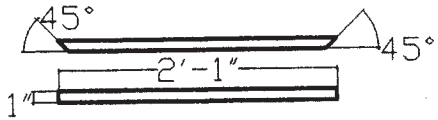

Front Main Support

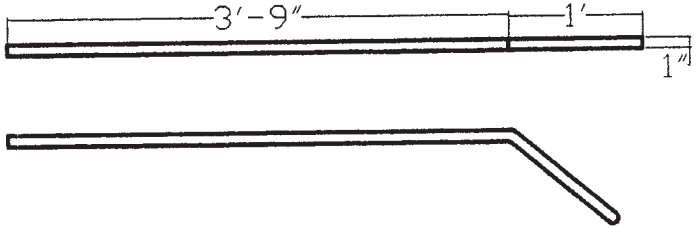

Rear Main Support

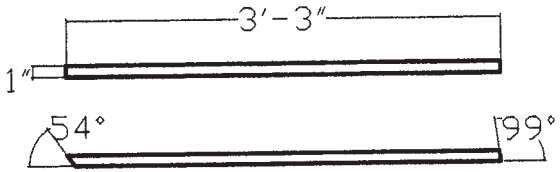

Wheel

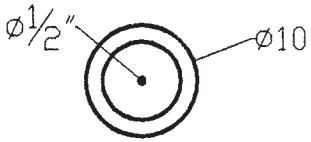

Axle

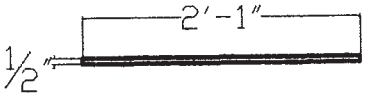
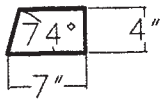
Side Plate