Tilting Calf Hoof Trimming Table

Scale: 1"=1'

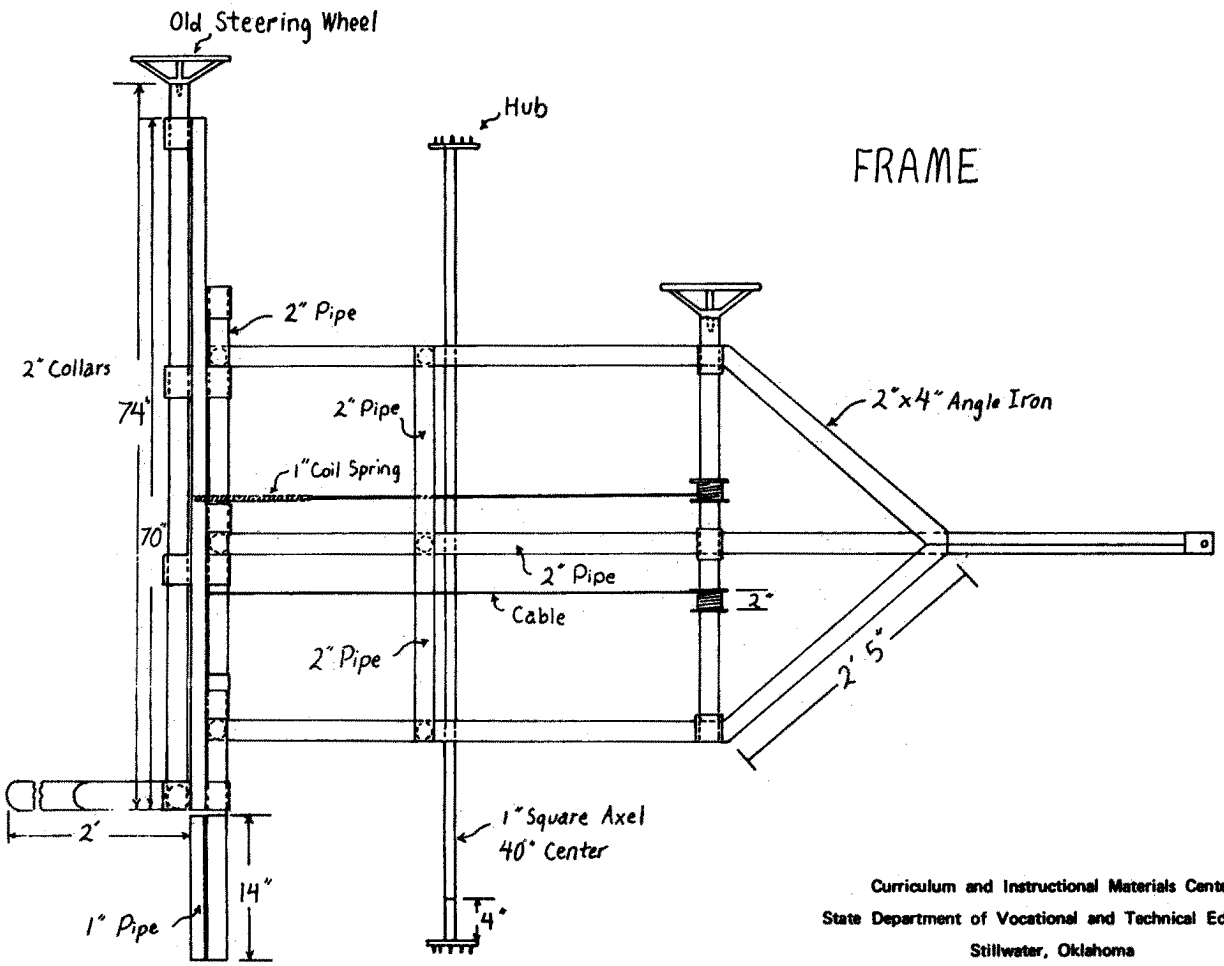

Courtesy of Davis
Vocational Agriculture Department

BILL OF MATERIAL

1 Piece of Sheet Metal 6' x 4'
1 Piece of 2" Pipe 32" Long
1 Piece of Sheet Metal 4' x 16"
4 Pieces of 1 1/2" Pipe 6' Long
6 Pieces of 1 1/2" Pipe 4' Long
2 Pieces of 1 1/2" Pipe 16" Long
2 Pieces of 1 1/2" Pipe 36" Long
2 Pieces of 1 3/4 Pipe 28" Long
12 Pieces of 1 3/4 Pipe 4" Long
1 Piece of 2" Pipe 72" Long
2 Pieces of 2" x 4" Angle Iron 50" Long
2 Pieces of 2" x 4" Angle Iron 2'5" Long
2 Pieces of 2" x 4" Angle Iron 24' Long
2 Pieces of 2" Pipe 40" Long
1 Piece of 1" Square Axel 80" Long
1 Piece of 2" Pipe 68" Long
2 Pieces of 4" x 5" Strap Metal
1 Piece of 2" Pipe 74" Long
1 Piece of 1" Pipe 19" Long
13 Pieces of 2" Pipe Collar 4" Long
2 Pieces of 2" x 4" Angle Iron 40" Long
3 Pieces of 2" Pipe 6" Long
3 Pieces of 2" Pipe 9 1/2" Long
2 Pieces of 1/4" Metal Strap 4" x 12"
2 Pieces of 1/4" Metal Strap 4" x 26"
1 Piece of 2" Pipe 40" Long
1 Piece of 2" Pipe 26" Long
2 Wheel Brackets 4" x 6"
2 Steering Wheels, 2 wheel hubs, 2 Cable Spools
2 Pieces of Metal Plate 2" x 6"
4 Pieces of Circular Metal 3" Diameter
2 Pieces of 5" Stripping and Medium Chain

Curriculum and Instructional Materials Center
State Department of Vocational and Technical Education
Stillwater, Oklahoma

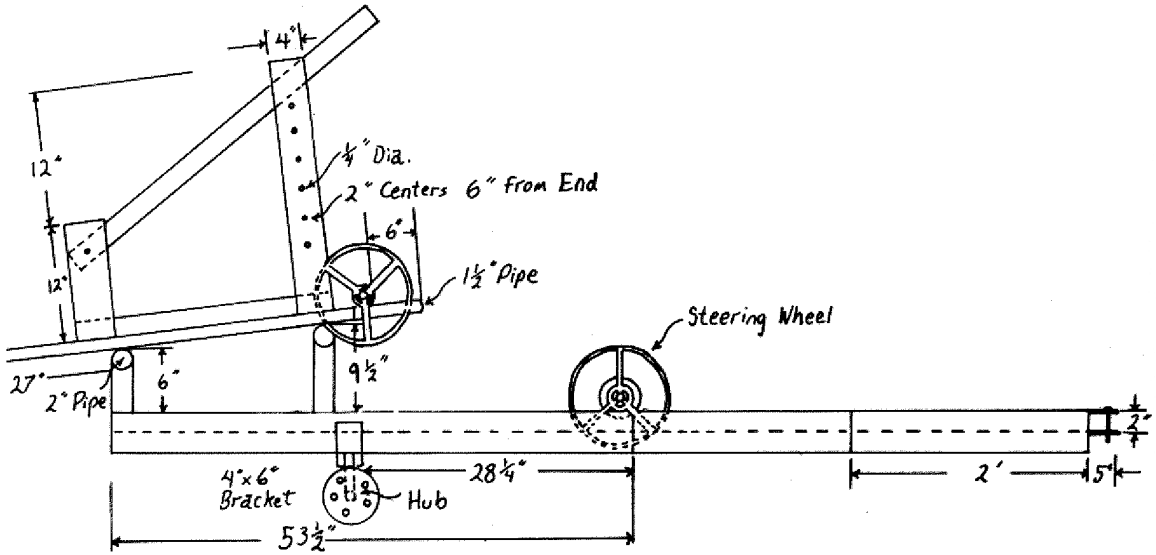
4"
12"
12"
¼" Dia.
2" Centers 6" from End
6"
1½" Pipe
Steering Wheel
27"
2" Pipe
6"
9½"
½"
4"x6"
Bracket
Hub
28¼"
2'
5"
53½"

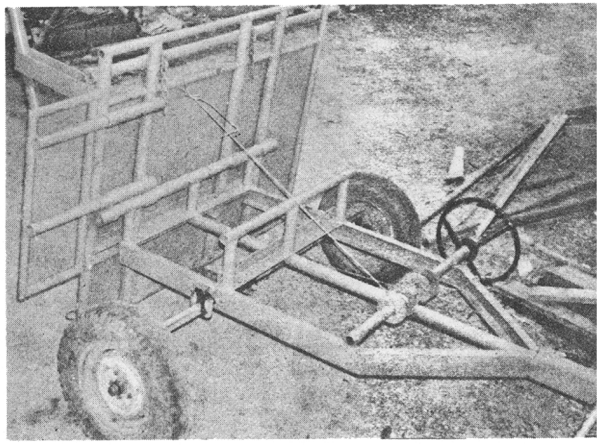

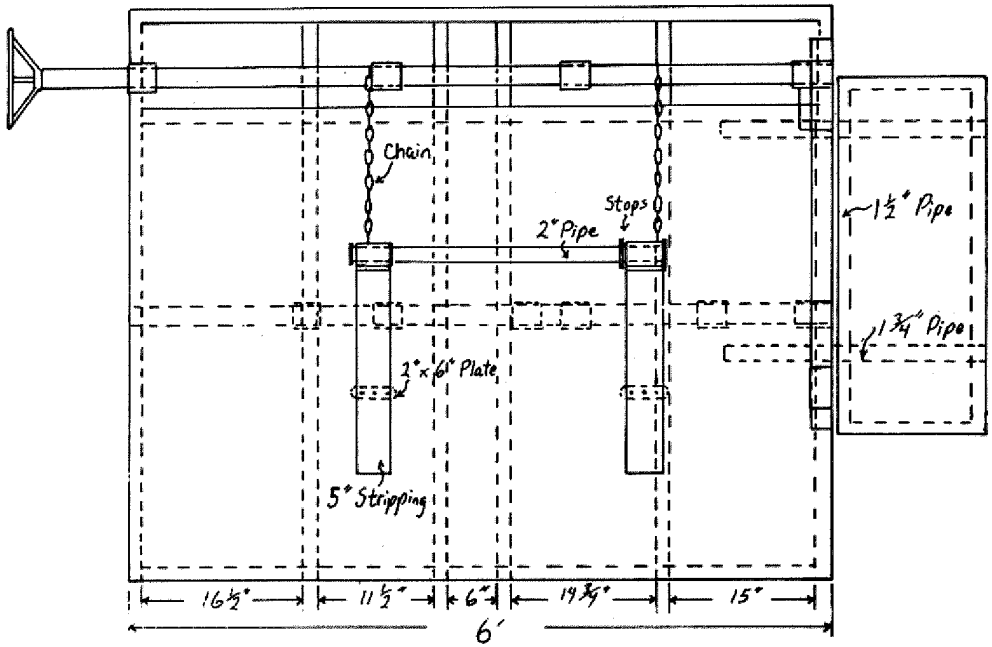
Chain
Stops
2" Pipe
1½" Pipe
1¾" Pipe
2"x6" Plate
5" Stripping
16½"
11½"
6"
19⅜"
15"
6'

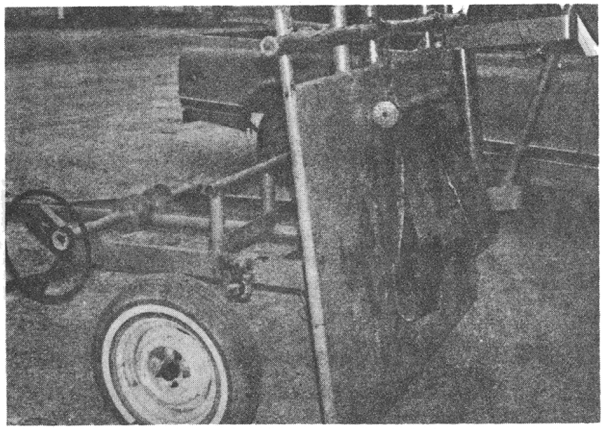

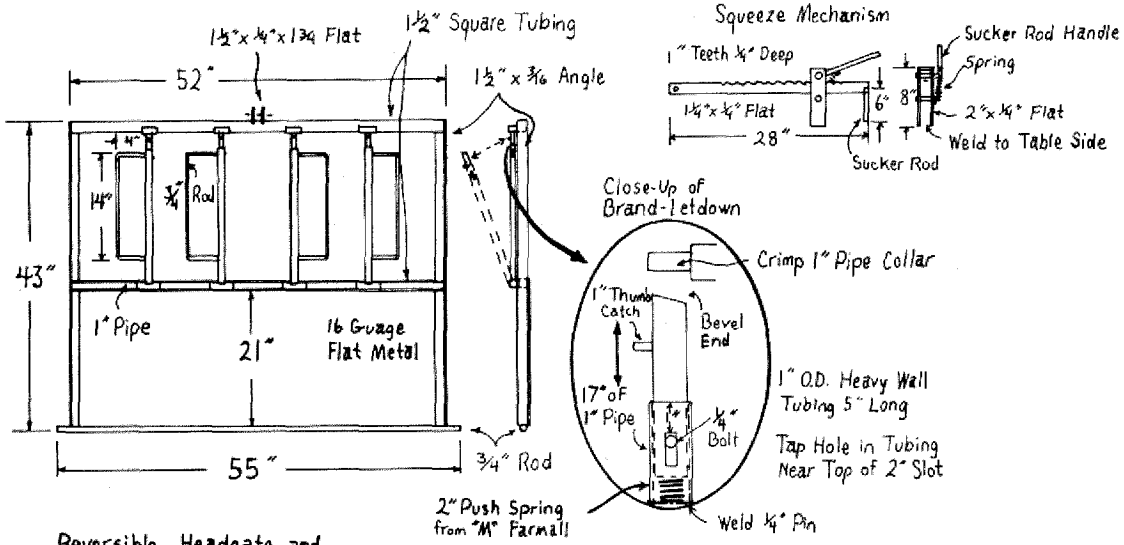

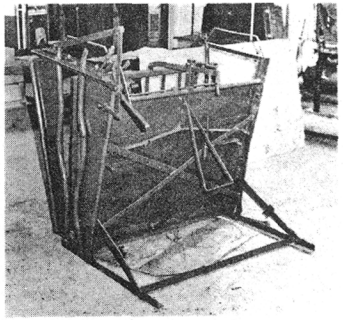

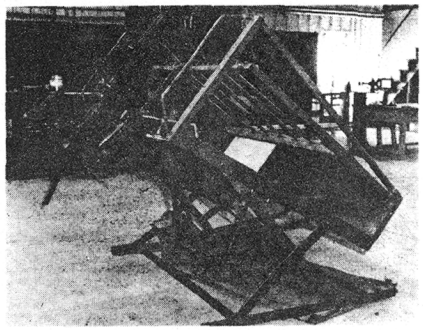

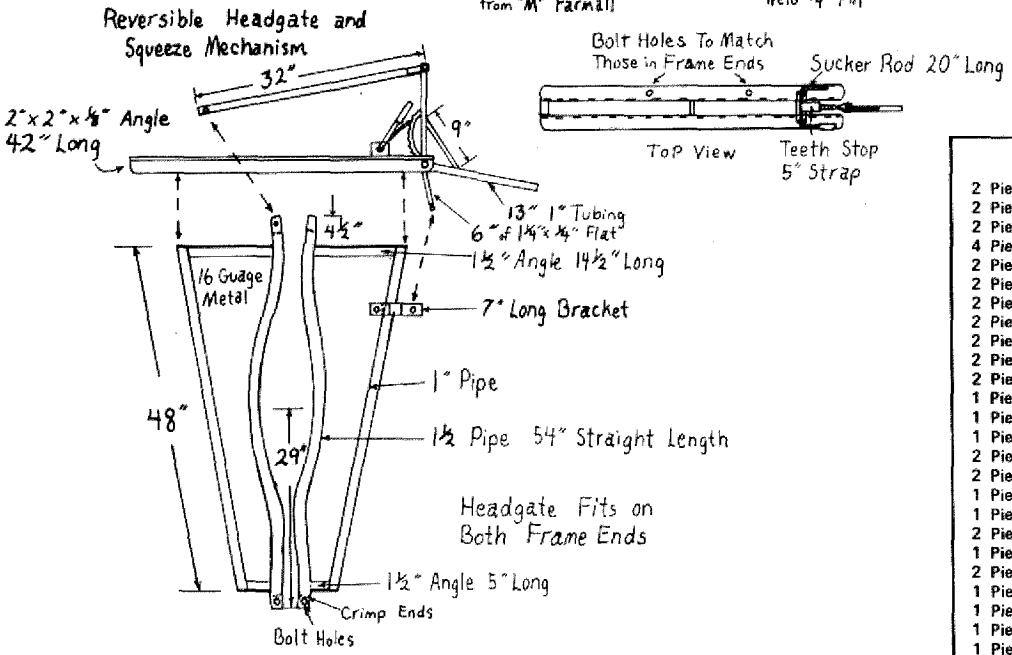

BILL OF MATERIAL

- 2 Pieces of 1½" x 1½" Angle Iron 55½" Long
- 2 Pieces of 1½" x 1½" Angle Iron 45" Long
- 2 Pieces of 1½" x 1½" Angle Iron 4" Long
- 4 Pieces of 1½" x ¼" Strap 7" Long
- 2 Pieces of 3/8" x 2" Strap 29" Long
- 2 Pieces of 2" Channel 4" Long
- 2 Pieces of 1½" x ¼" Strap 59" Long
- 2 Pieces of 3/8" x 2" Strap 45½" Long
- 2 Pieces of 2" x 2" x 1/8" Angle Iron 28" Long
- 2 Pieces of 1" Pipe 51" Long
- 2 Pieces of 5/8" Sucker Rod 30" Long
- 1 Piece of 1½" x 1½" Angle Iron 52" Long
- 1 Piece of 1" Pipe 55" Long
- 1 Piece of 16 Guage Metal 7" x 55"
- 2 Pieces of Metal Strap 10" Long
- 2 Pieces of 2" x 3" x 3/16" Angle Iron 50½" Long
- 1 Piece of 16 Guage Sheet Metal 55" x 41½"
- 1 Piece of 5/8" Sucker Rod 45" Long
- 2 Pieces of 1½" x ¼" Strap 7" Long
- 1 Piece of 1½" Strap 52" Long
- 2 Pieces of 1" x ¼" Strap 27½" Long
- 1 Piece of 1" Pipe 55" Long
- 1 Piece of 1" x ¼" Strap 40" Long
- 1 Piece of 1¼" Strap 14" Long
- 1 Piece of 1¼" Strap 20' Long
- 1 Piece of 16 Guage Sheet Metal 21" x 52"
- 1 Piece of 1½" Square Tubing 52" Long
- 1 Piece of ¾" Rod 55" Long
- 1 Piece of 1" Pipe 52" Long
- 4 Pieces of 1" Pipe 17" Long
- 4 Pieces of 1" O.D. Heavy Wall Tubing 5" Long
- 4 Pieces of 1" Pipe Collar 1" Long
- 4 Pieces of ¼" Bolt & ¼" Pin
- 4 Pieces of 2" Push Spring
- 4 Pieces of ¾" Rod 22" Long
- 2 Pieces of 1" Pipe 48" Long
- 2 Pieces of 1½" Pipe 54" Long
- 2 Pieces of 1½" Angle Iron 14½" Long
- 2 Pieces of 1½" Angle Iron 5" Long
- 1 Piece of 16 Guage Metal 28" x 48"
- 1 Piece 1¼" x ¼ Flat 7" Long
- 2 Pieces of 2" x 2" x 1/8" Angle Iron 42" Long
- 1 Piece of ¾" Tubing 13" Long
- 1 Piece of 1¼" x ¼" Flat 55" Long
- 1 Piece of 5/8" Rod 20" Long
- 1 Piece of 1¼" x ¼" Flat 28" Long
- 1 Piece of 5/8" Rod 16" Long
- 2 Pieces of 2" x ¼" Flat 8" Long
- 1 Piece of old Flywheel with Teeth