Calf Tracker

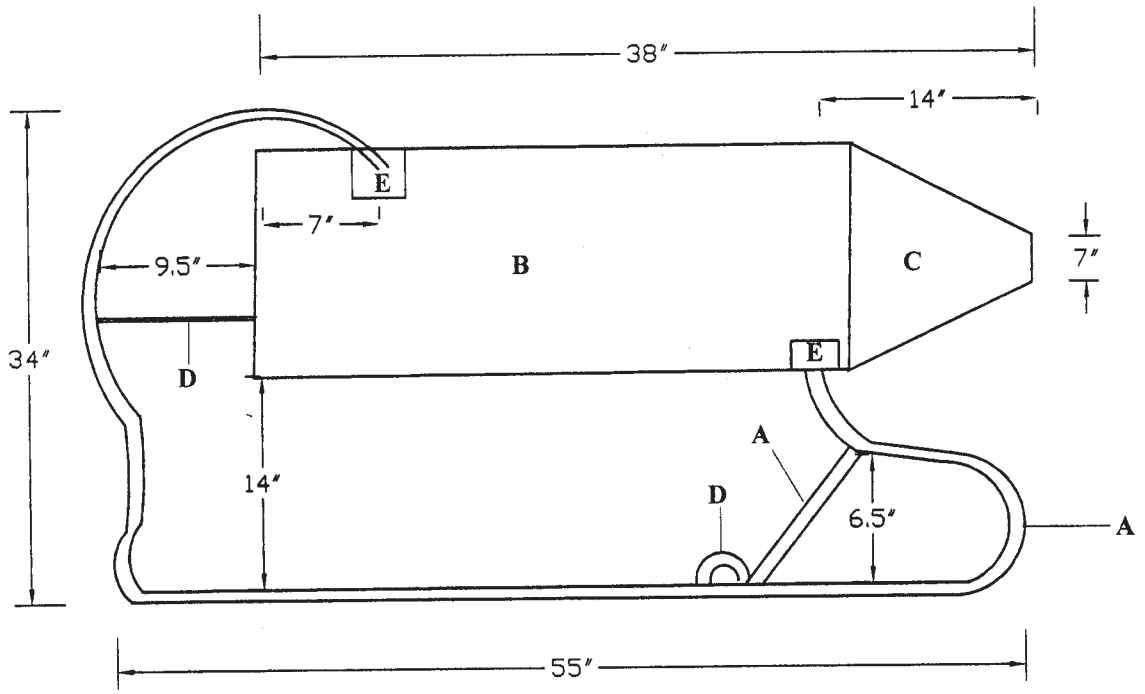

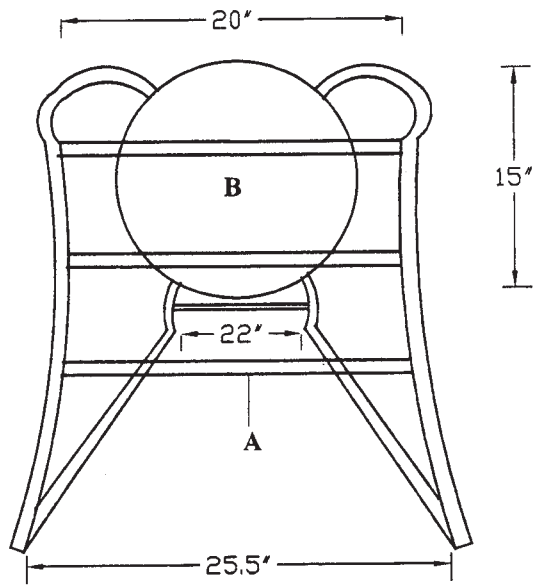

A. $\frac{1}{2}$" Sch. 40 pipe
B. 30 gallon barrel
C. 16 gauge sheet metal
D. $\frac{3}{8}$" round stock
E. 2" flat stock