Folding Sheep Blocking Stand

Scale:3/32"=1'

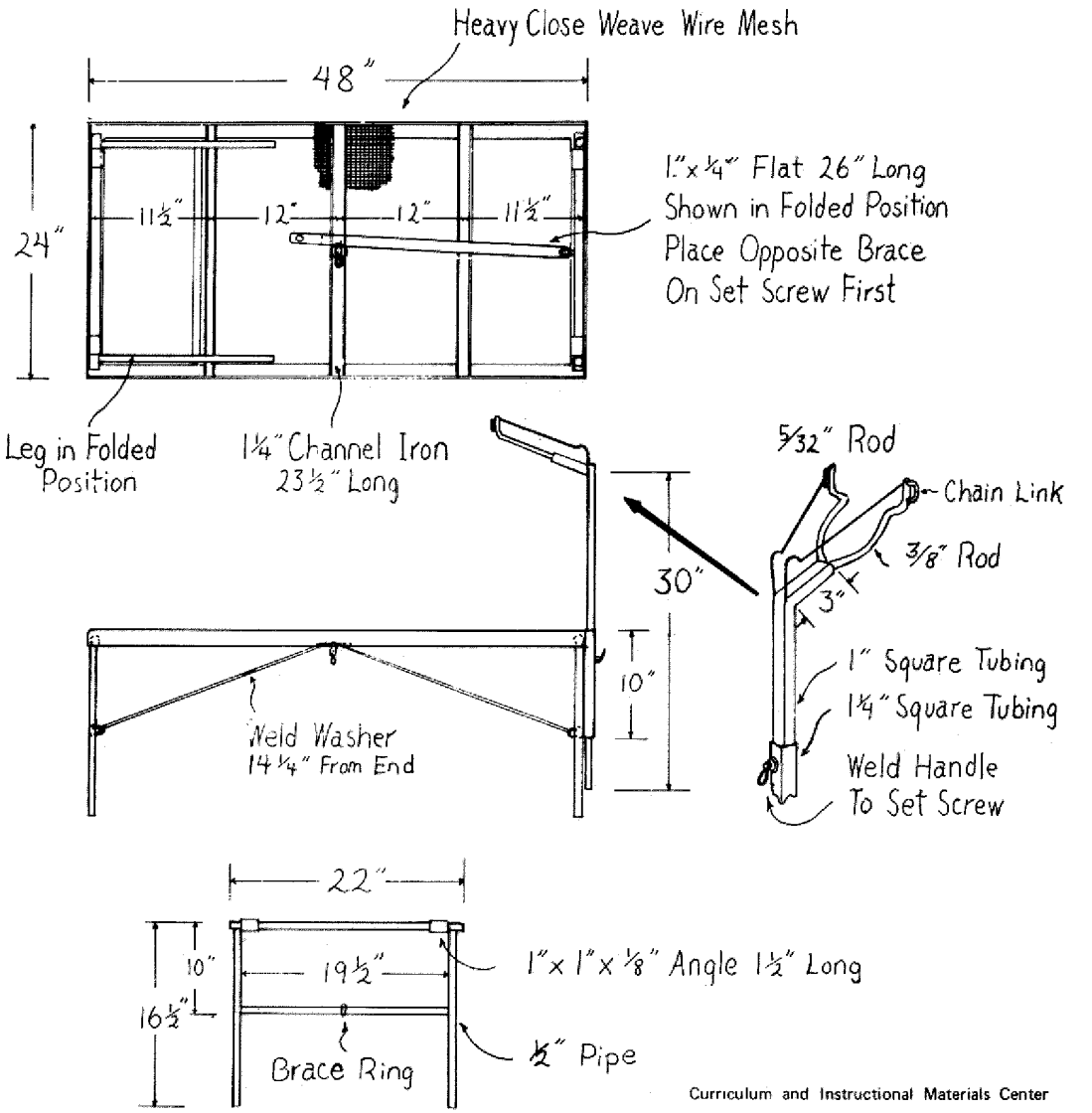

BILL OF MATERIAL

- 2 Pieces of 1½" x 1½" Angle Iron 48" Long
- 1 Piece of Heavy Mesh Wire 24" x 48"
- 1 Piece of 1 1/4" Square Tubing 10" Long
- 1 Piece of 1" Square Tubing 33" Long
- 2 Pieces of 3/8" Rod 8" Long
- 4 Pieces of 1" x 1" x 1/8" Angle Iron 1½" Long
- 4 Pieces of ½" Pipe 16½" Long
- 2 Pieces of ½" Pipe 19½" Long
- 2 Pieces of ½" Pipe 22" Long
- 3 Pieces of 1 1/4" Channel Iron 23½" Long
- 2 Pieces of 1/4" x 1" Flat Metal 26" Long
- 2 Pieces of 5/32" Rod 10" Long
- 1 Washer, 2 Set Screws, and 2 Brace Rings

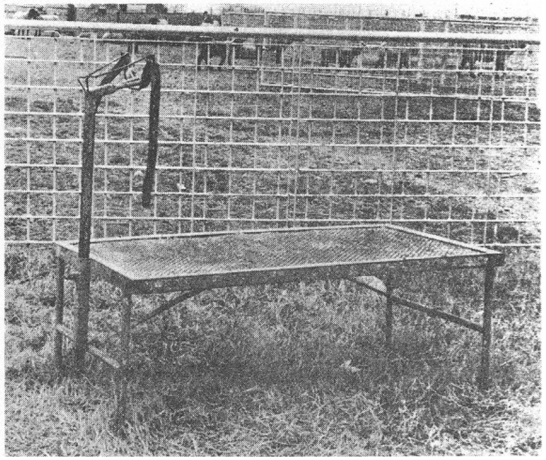

Curriculum and Instructional Materials Center
State Department of Vocational and Technical Educatio
Stillwater, Oklahoma