# Gooseneck Stock Trailer

**Scale: 3/8"=1'**

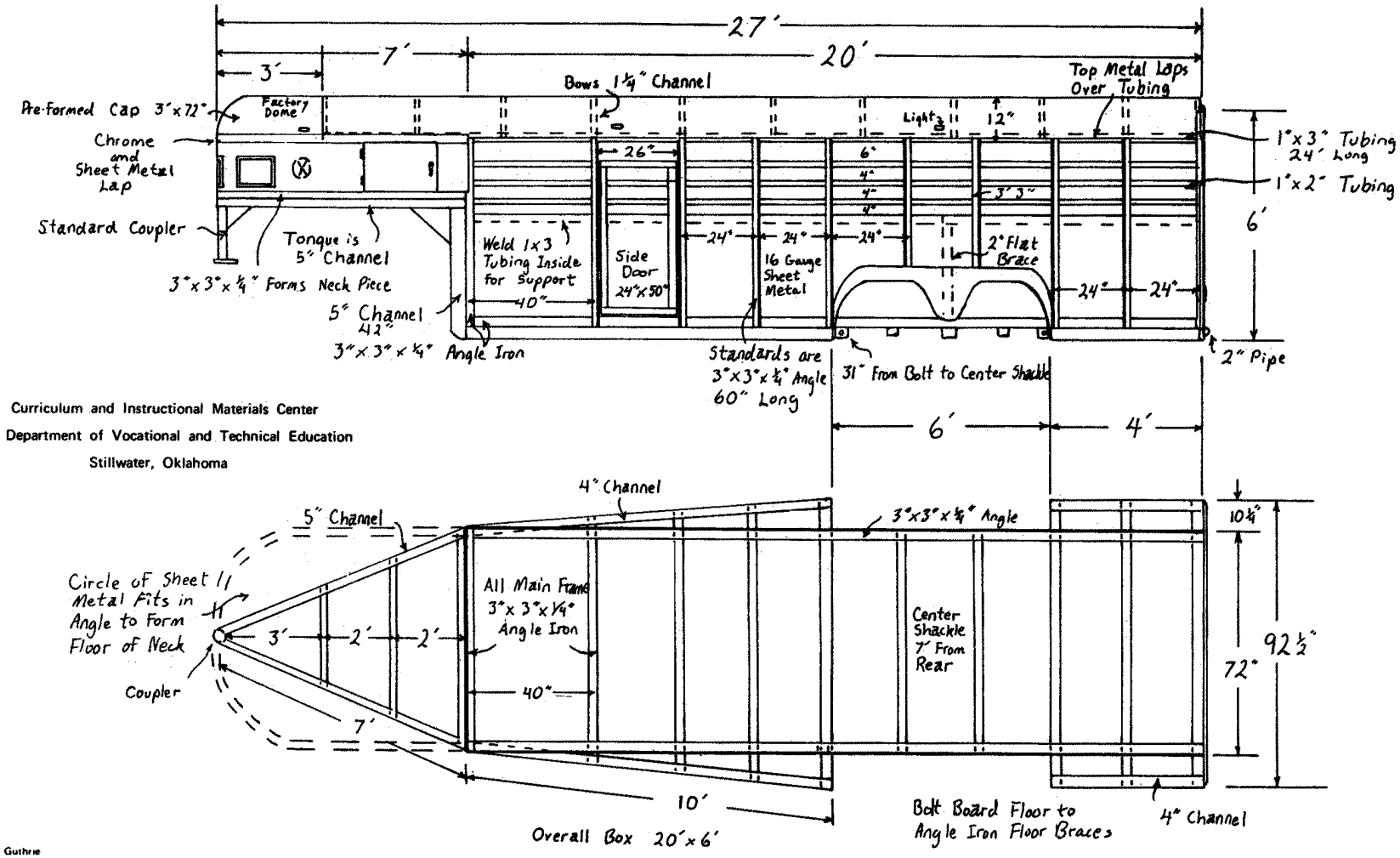


Curriculum and Instructional Materials Center
State Department of Vocational and Technical Education
Stillwater, Oklahoma

Courtesy of Guthrie
Vocational Agriculture Department

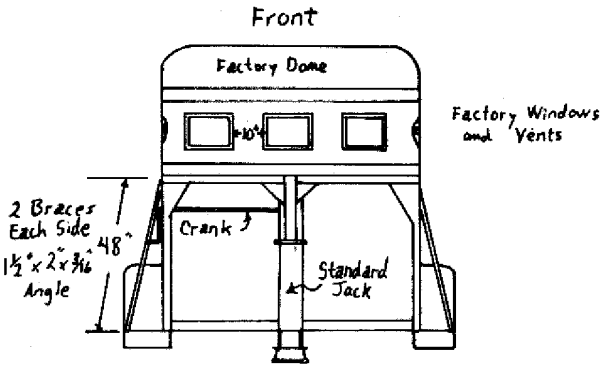


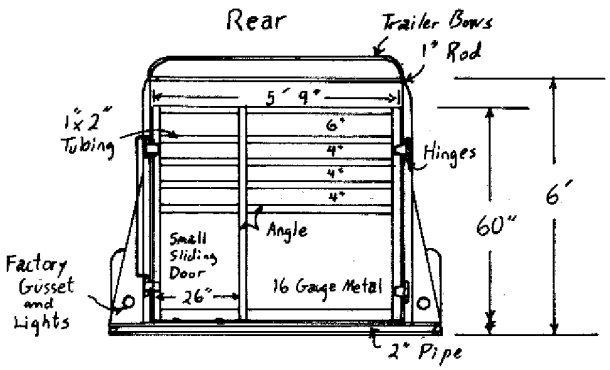


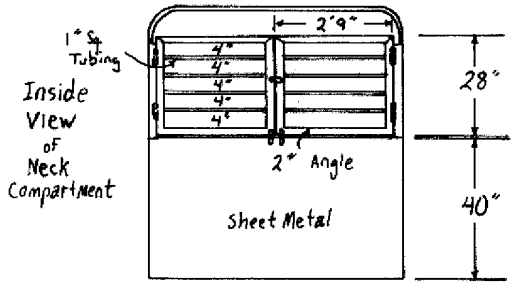


**BILL OF MATERIAL**

2 Pieces of D5086 Brake Axles
1 Pair of 10 3/4" x 72" Fenders
1 Set of 6 Leaf Springs
1 Set of 2" 4 Bolts w/Plates
1 Goose Neck Hitch
1 Landing Gear
1 Pair of Tail Light Gussets
2 Pair of 1/4" Gussets
1 Piece of 3/4" Pipe 21' Long
1 Piece of 9/16" Rod 20' Long
1 Piece of 3/4" Rod 20' Long
1 Piece of 9/16" Strap 10' Long
2 Sets of Gate Channel
1 Piece of 5" Channel 20' Long
100' of 3" X 3" X 1/4" Angle Iron
40' of 4" Channel Iron
40' of 3" X 3" X 1/4" Angle Iron
40' of 4" Channel Iron
40' of 3" X 3" X 1/4" Angle Iron
40' of 3" X 2" X 3/16" Angle Iron
100' of 2" X 2" X 1/8" Angle Iron
100' of 2" X 1 1/2" X 3/16" Angle Iron
20' of 2 1/2" X 2 1/2" X 3/16" Angle Iron
48' of 1" X 3" Tubing
200' of 1" X 2" Tubing
20' of 1" Tubing
1 Piece of 16 Guage Nose Sheet 60" X 120"
2 1/2 Pieces of 16 Guage Sheet 60" X 109"
100 Floor Screws and 1 2 5/16" Ball
1 Piece of Crown 72" Wide
3 Pieces of 20 Guage Sheet Metal 72" X 96"
9 Pieces of Trailer Bows 72" Wide
5 Pieces of 16 Guage Sheet Metal 11' X 36"
Also Flush Mount Tail Lights, Wiring, Jack Handle, 150 X 16-8 Ply Tires, Vents, Dome Lights, 16" Wheels, Plastic Windows, Nose Side Door, and Chrome
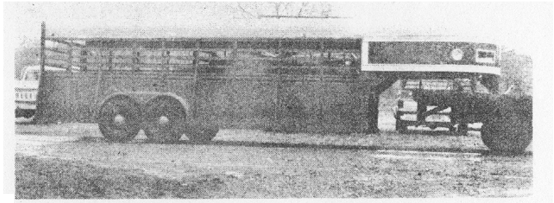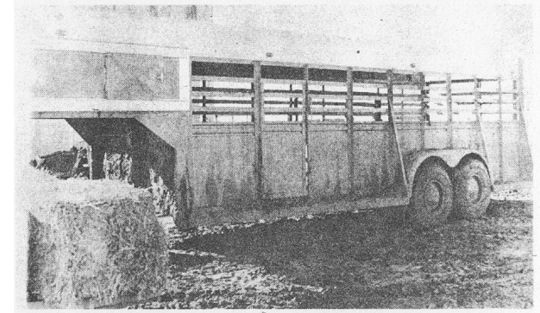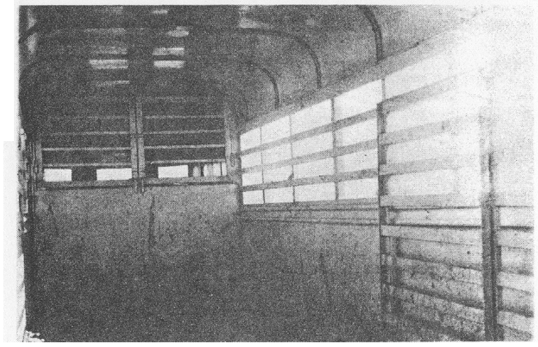
Middle Gate Inside, is 10' From Rear
Made of 1"x2" Tubing and Angle
Iron 4'x6' Overall 4" Gap Between
Tubing with Angle Standard in Center