Hay Feeder

Scale: ½" = 1'

BILL OF MATERIAL

4 PIECES OF	2" PIPE	10"
2 PIECES OF	2" PIPE	9'8"
4 PIECES OF	2" PIPE	4'
4 PIECES OF	2" PIPE	3'8"
2 PIECES OF	2" PIPE	40"
26 PIECES OF	1" PIPE	2"
10 PIECES OF	STRAP IRON	18"
6	1"x6" BOARDS	9'8"
6	1"x6" BOARDS	40"
60	BOLTS ½" x 1½" LONG	

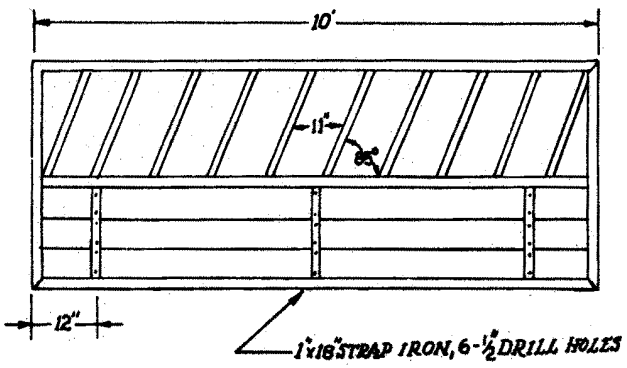

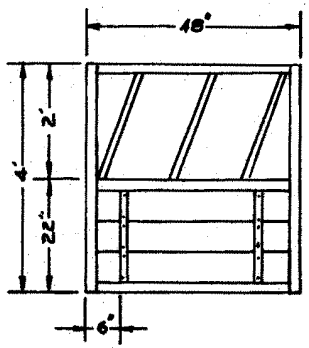

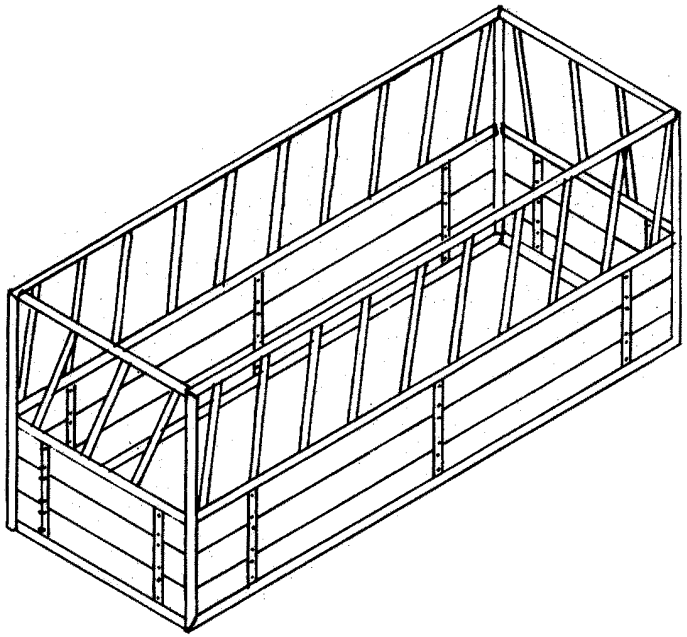

Courtesy of Jet-Nash
Vocational Agriculture Department

Curriculum and Instructional Materials Center
State Department of Vocational and Technical Education
Stillwater, Oklahoma

DWN BY: JOHN McEACHERN