4 Horse Hot Walker

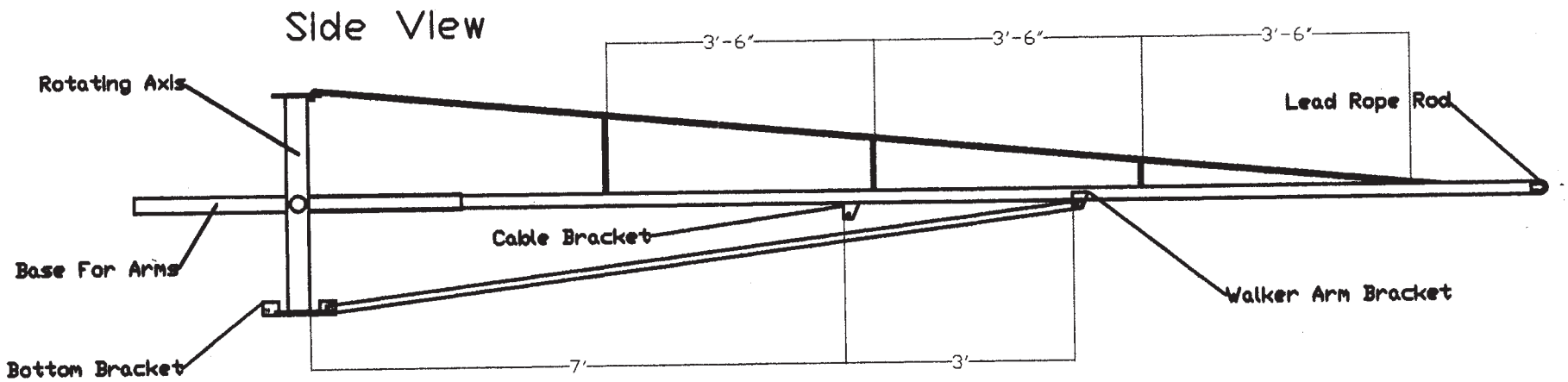

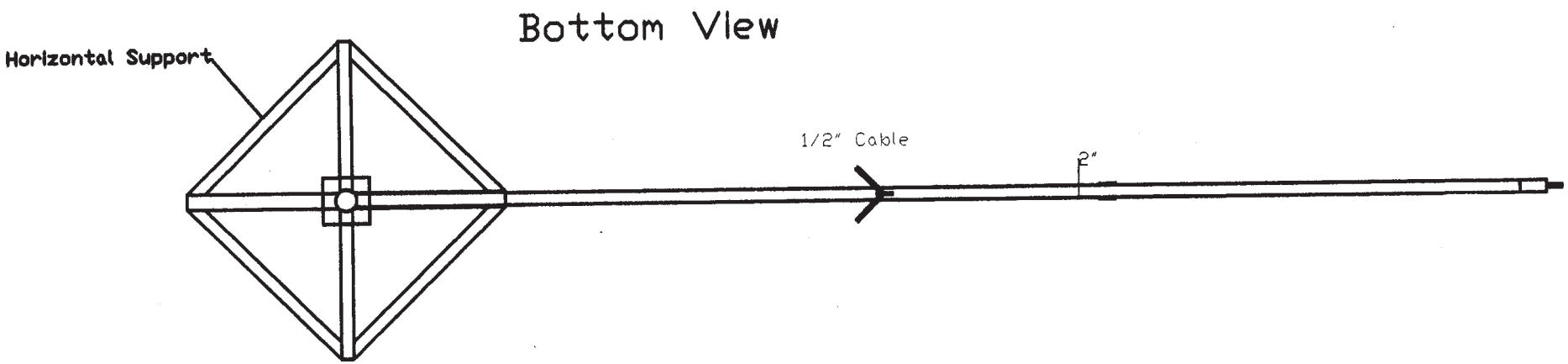

4 Horse Hot Walker

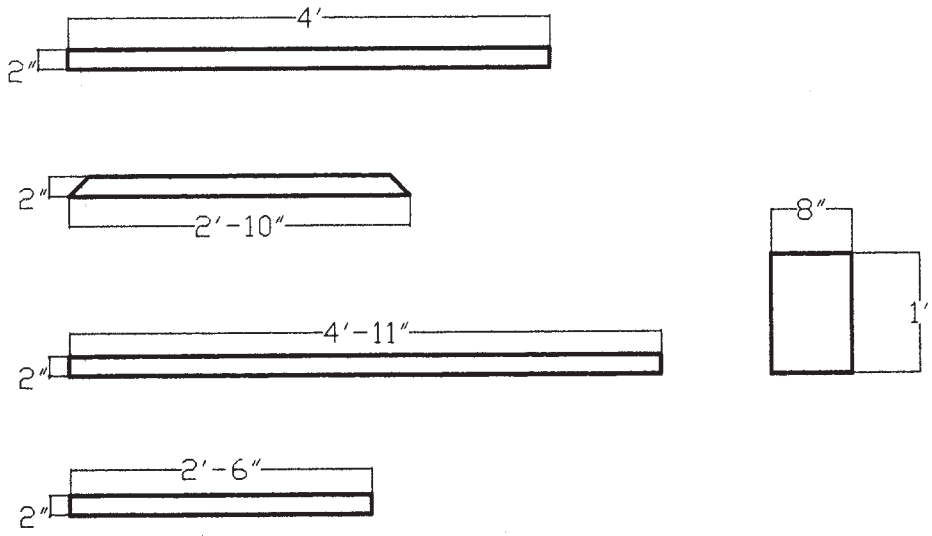

Materials:

4 - 2"X30" Pipe
2 - 2"X59" Pipe
4 - 2"X34" Pipe
2 - 2"X48" Pipe
1 - Motor Mount Plate
1 - Rearend Mounted Vertically

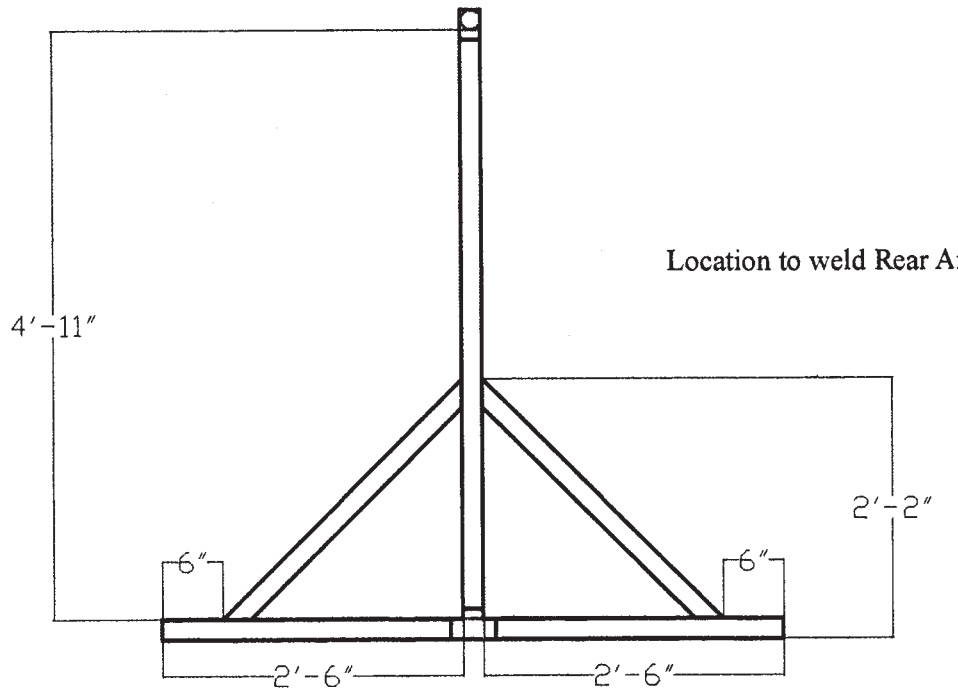

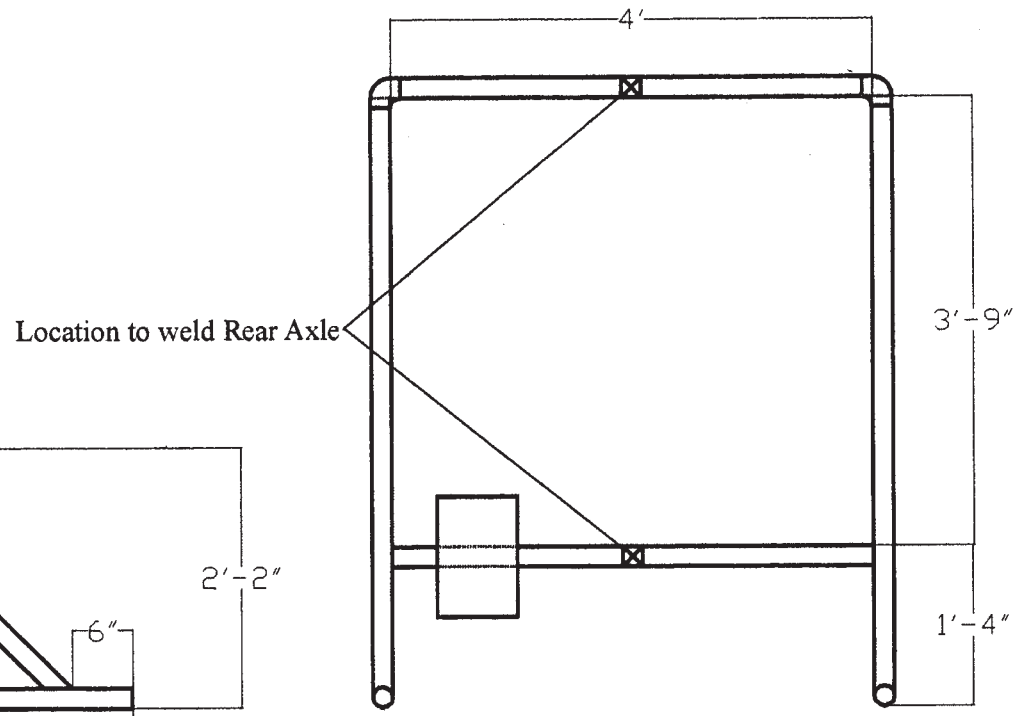

4 Horse Hot Walker

Materials:
1- Rotating Axis
1- Bottom Plate
1- Top Plate
1 to go between each lug nut (5 or 6)
4- Lead Rope U Rods
8- Bottom Support Arm Brackets
8- Bottom Support Arm Brackets For Walker Arm
4- Cable Brackets (Same as Walker Arm Bracket, but larger Hole)
4- Walker Arm Bases
4- Horizontal Support Arms
4- Of Each Support Rods (Total of 12)
4- Of Each Upper, Middle, And Lower Support Arms

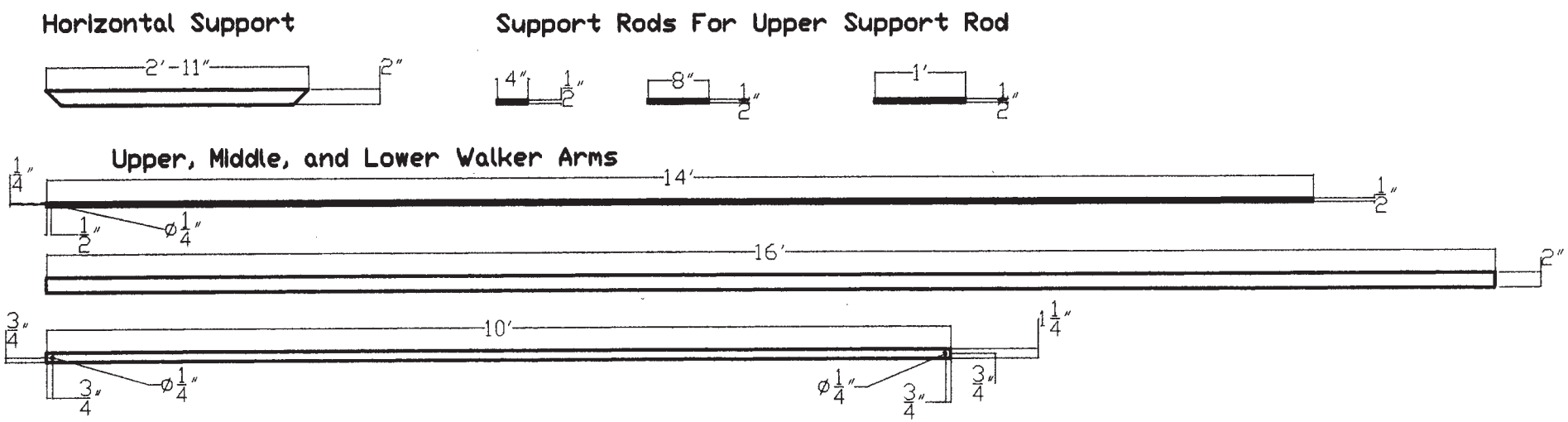

4 Horse Hot Walker

Rotating Axis

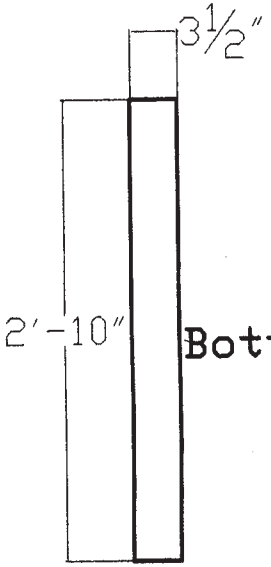

Bottom Plate

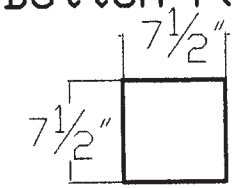

Top Plate

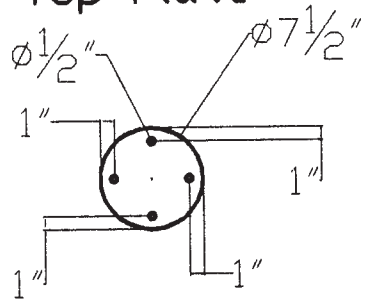

Rotating Axis Support

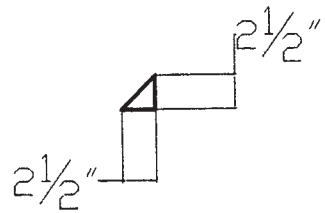

Bottom Support Arm Bracket

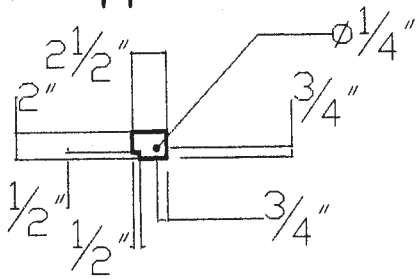

Lead Rope U Rod

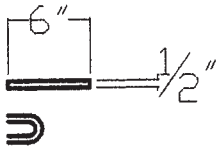

Base for Walker Arms
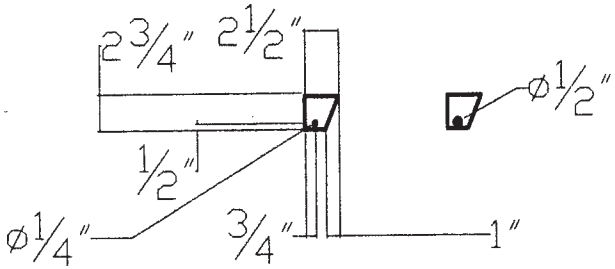
Bottom Support Arm and Cable Brackets Attached To Walker Arms