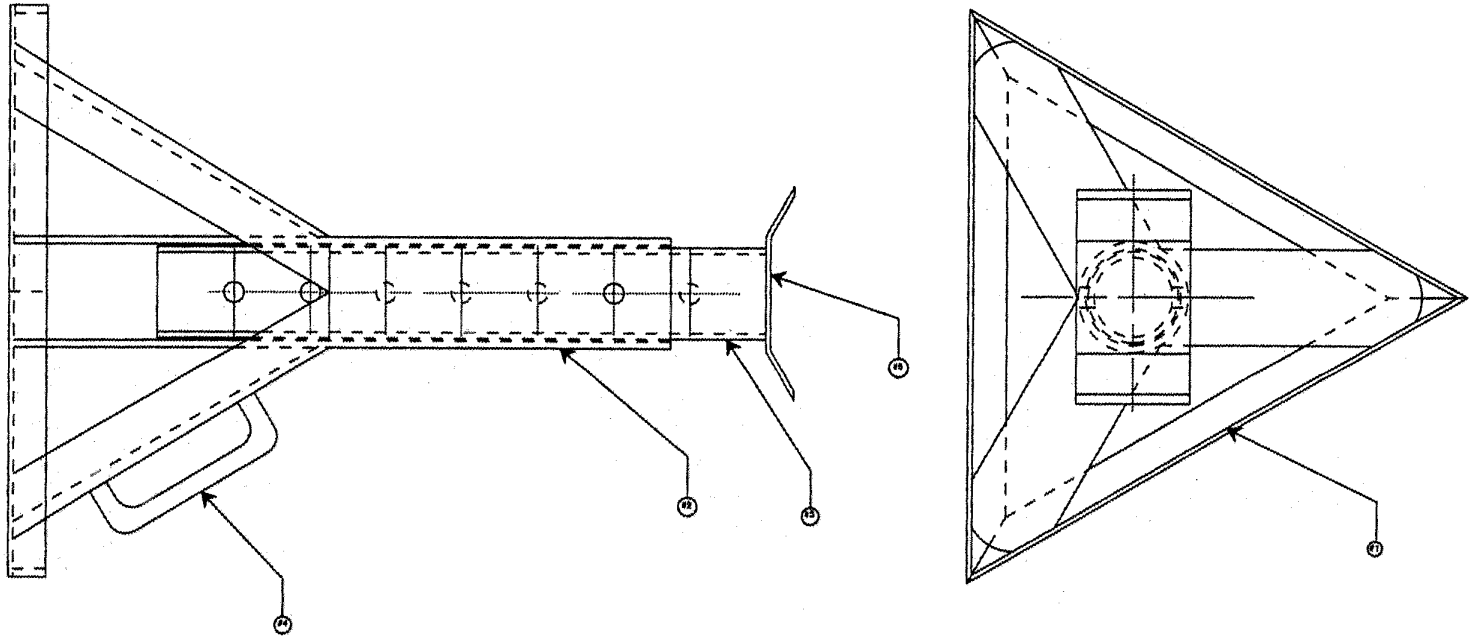

NO.	DESCRIPTION	MATL.	REQD
5	STABILIZER PLT.	STL.	1
4	HANDLE	STL RD.	1
3	ADJ. PIPE	SCH 40	1
2	STAND	SCH 40	1
1	BASE ANGLE	STL.	3

ASSEMBLED VIEW

DR.BY: M. CRAMER

3-18-1997

1/3 SCALE

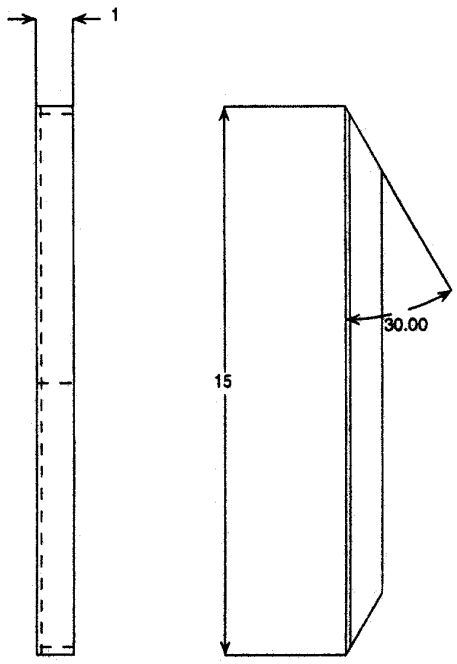

NOTES:
1X1X 1/8 ANGLE
15"LONG

BASE	DR. BY: M. CRAMER	3- 18- 1997	1/3 SCALE	PART # 1

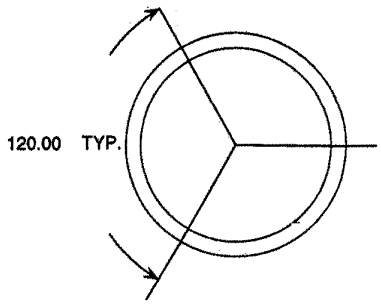

VIEWED 2X SCALE

NOTES:

SCHEDULE 40
ROLLED PIPE
2 1/2 I.D.
18" LONG

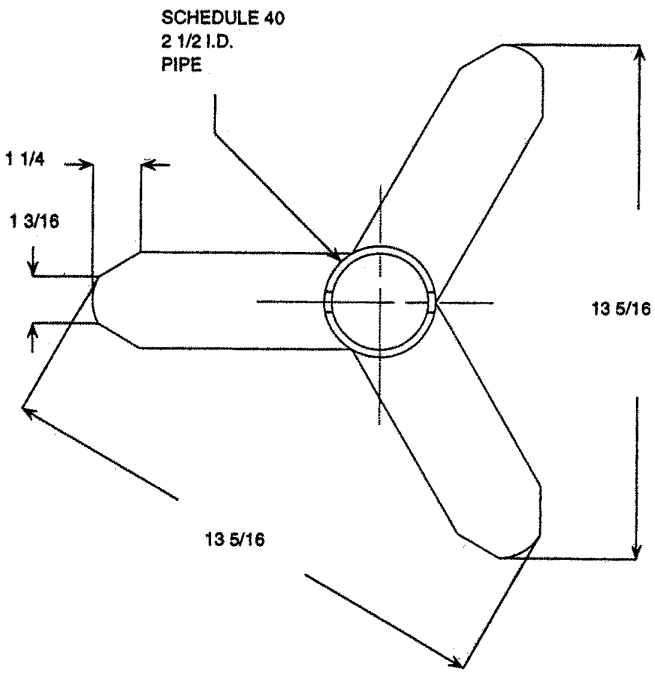

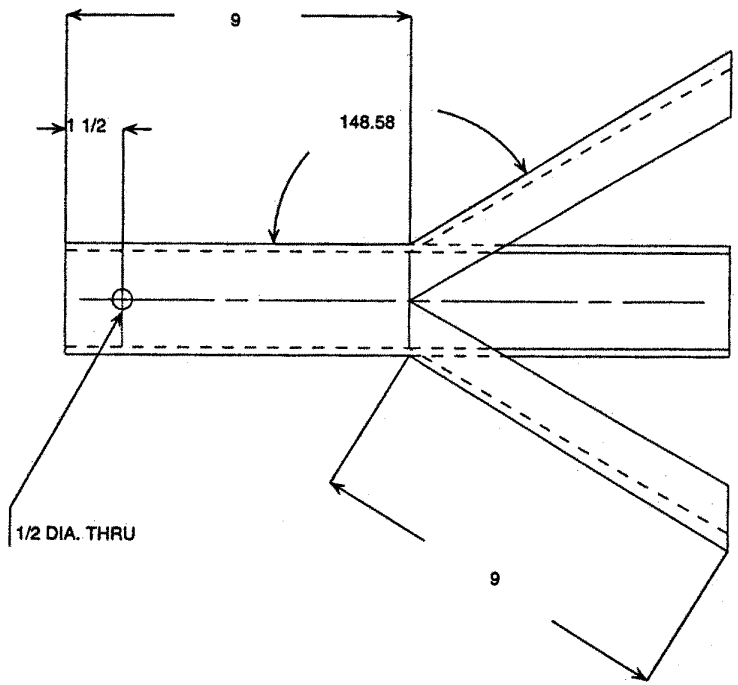

STAND	DR. BY: M. CRAMER	3- 18- 1997	1/3 SCALE	PART # 2

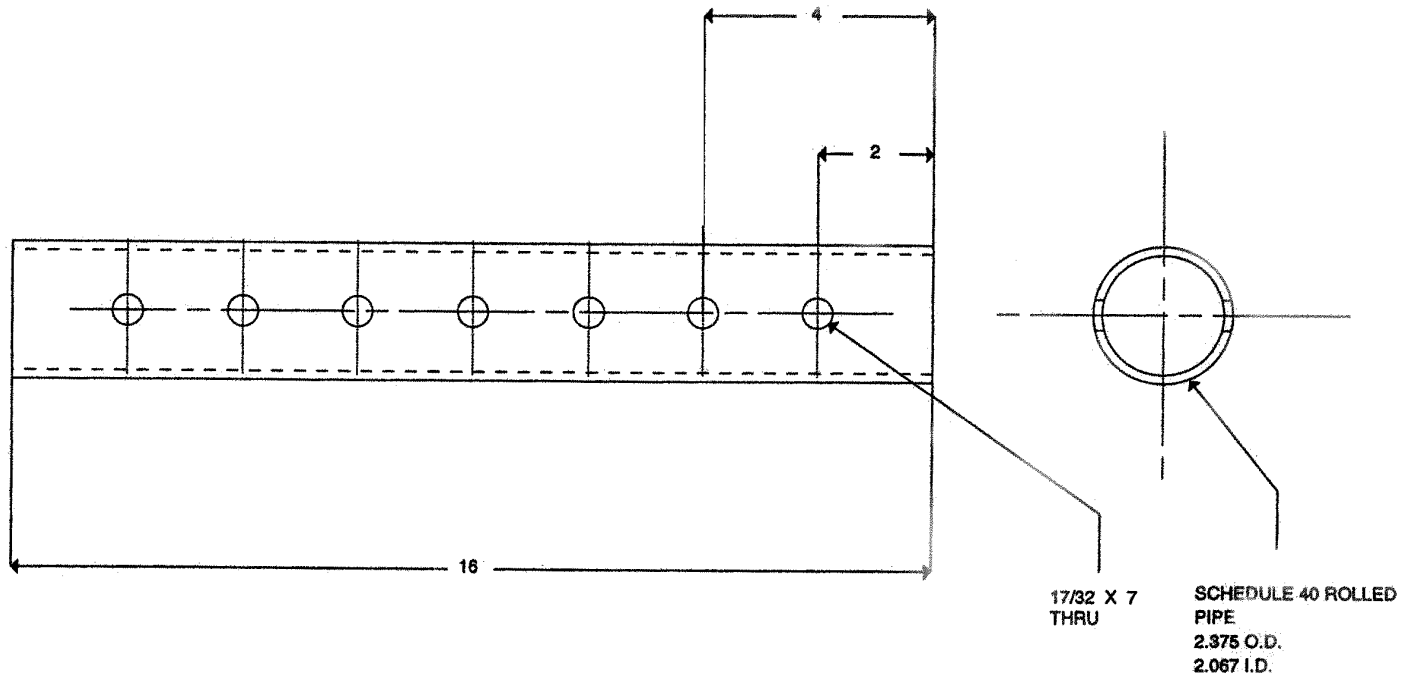

HEIGHT ADJ PIPE	DR. BY: MATTHEW CRAMER	MARCH 18,1997	HALF SCALE	PART # 3

NOTE:
1/2 steel rod
8" long

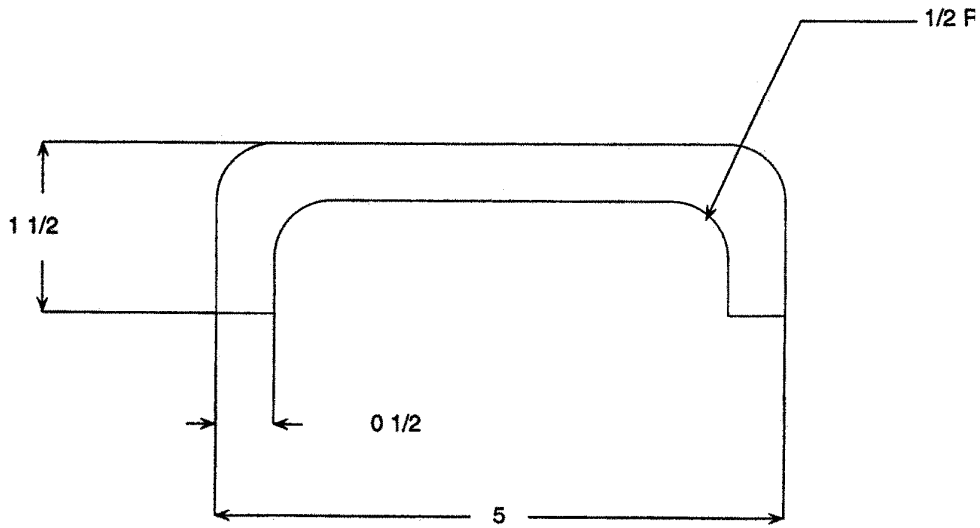

HANDLE	DR. BY: MATTHEW CRAMER	MARCH 18,1997	FULL SCALE	PART #4

NOTES:
1/4 STEEL PLATE
3X6

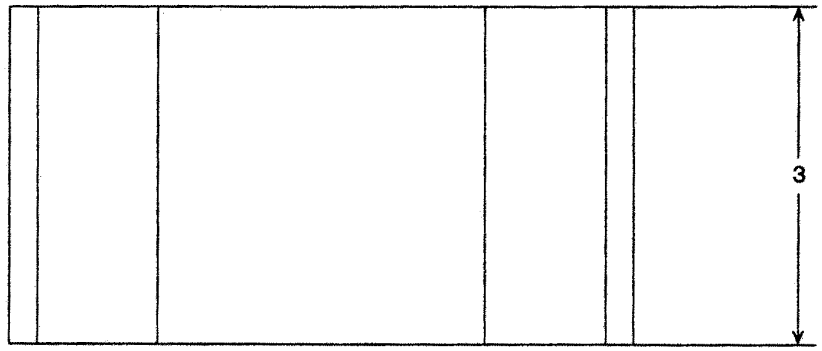

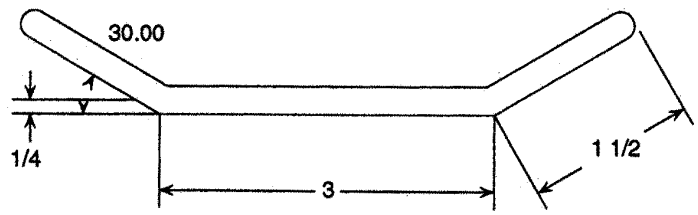

STABILIZER PLATE	DR. BY: MATTHEW CRAMER	MARCH 18,1997	FULL SCALE	PART #5