Loading Chute

Scale: ½" = 1'

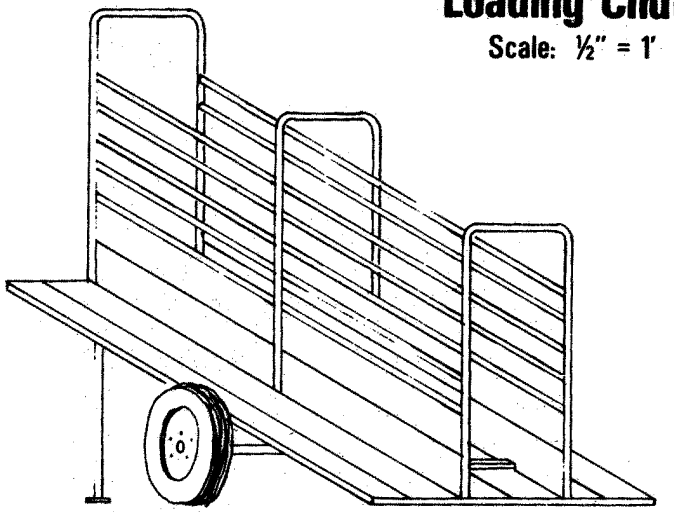

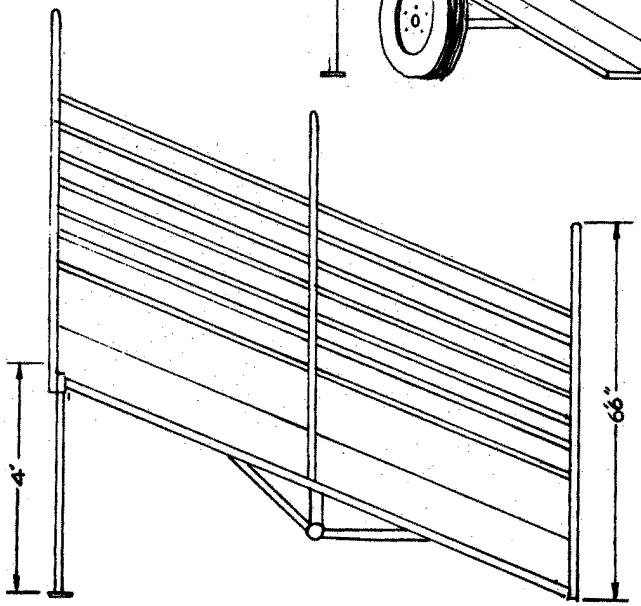

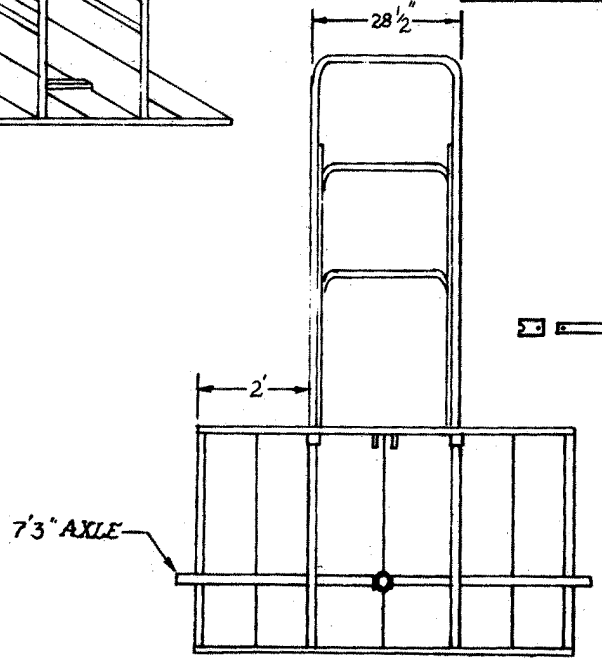

BILL OF MATERIAL

10 PIECES OF 1" SQUARE TUBING 10' LONG
6 PIECES OF 1¼" SQUARE TUBING 5' LONG
8 PIECES OF 1" SQUARE TUBING 26" LONG
1 PIECE OF 2½" PIPE 7' 3" LONG
5 PIECES OF 1¼" PIPE 4' LONG
2 PIECES OF 1½" PIPE 4" LONG
1 PIECE OF 2½" PIPE 9' LONG
4 PIECES OF 2"×1½" ANGLEIRON 10' LONG
2 PIECES OF 2"×1½" ANGLEIRON 6' 7" LONG
4 PIECES OF 2"×1½" ANGLEIRON 2' LONG
2 PIECES OF 2"×1½" ANGLEIRON 8" LONG
4 PIECES OF FLATIRON 4"×3"×½"
4 PIECES OF FLATIRON 4"×4"×½"
4 BOARDS 2"×10" – 10' LONG
24 - ¼" CARRIAGE BOLTS 2½" LONG
2 - ¼" MACHINE BOLTS 2½" LONG
1 - ½" MACHINE BOLTS 3½" LONG

HITCH IS 2½" PIPE 9' LONG WITH ½" DRILL

ADJUSTABLE STANDS OF 1¼" PIPE 4' LONG WITH 6-½" HOLES 1" APART

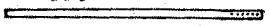

STAND HOLDER IS 1½" PIPE 4" LONG

4"×½"×3" WITH ½" DRILL

Courtesy of Jet-Nash
Vocational Agriculture Department

Curriculum and Instructional Materials Center
State Department of Vocational and Technical Education
Stillwater, Oklahoma

DWN BY: JOHN McEACHERN