Pickup Stock Racks

Scale: ¾" = 1'

BILL OF MATERIALS

4 PIECES OF 1¼" SQ. TUBING 4'2" LONG
2 PIECES OF 1¼" SQ. TUBING 3'10" LONG
2 PIECES OF 1" SQ. TUBING 7'10½" LONG
14 PIECES OF 1" SQ. TUBING 7'6" LONG
4 PIECES OF 1" SQ. TUBING 5'7½" LONG
2 PIECES OF 1" SQ. TUBING 7" LONG
2 PIECES OF 1" SQ. TUBING 6" LONG
4 PIECES OF 1" SQ. TUBING 1'10¾" LONG
2 PIECES OF 1" SQ. TUBING 5'4¾" LONG
2 PIECES OF 1" SQ. TUBING 5' LONG
4 PIECES OF 1" SQ. TUBING 4'10" LONG
4 PIECES OF 1" SQ. TUBING 4'7" LONG
6 PIECES OF 1" SQ. TUBING 4'5" LONG
8 PIECES OF 1" SQ. TUBING 3½" LONG
1 PIECE OF WIRE MESH 1'11" x 4'4½" LONG
1 PIECE OF ¾" ROD 16" LONG
4 PIECES OF 1" ROD 4" LONG
8 PIECES OF 1" SQ. TUBING 2" LONG
4 PIECES OF 1½" PIPE 2" LONG
3 PIECES OF 1" PIPE 2" LONG
4 PIECES OF 5/8" PIPE 1'4" LONG
4 MACHINE BOLTS-NUTS-WASHERS ½" x 5½"

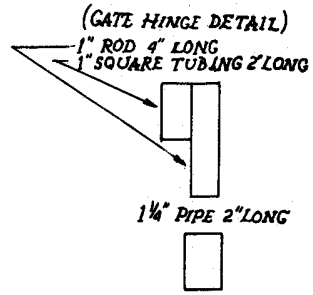

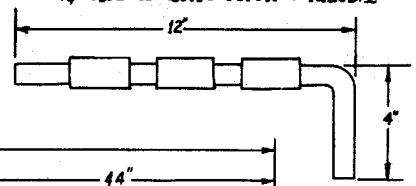

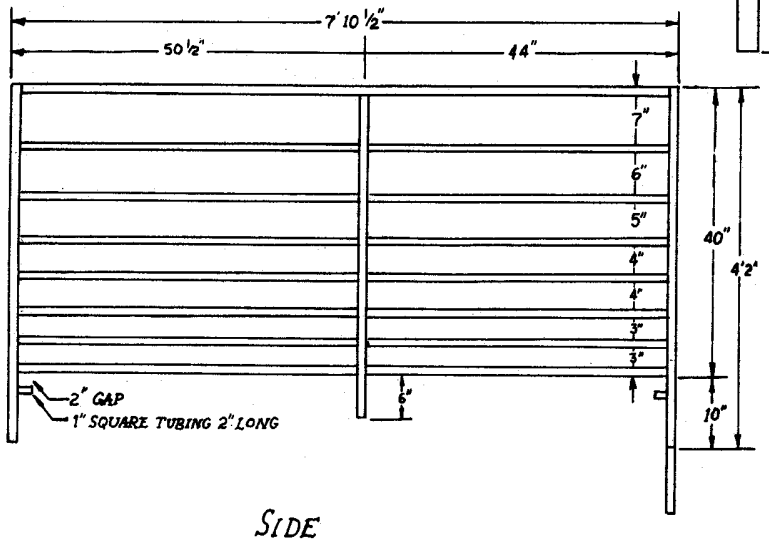

SIDE

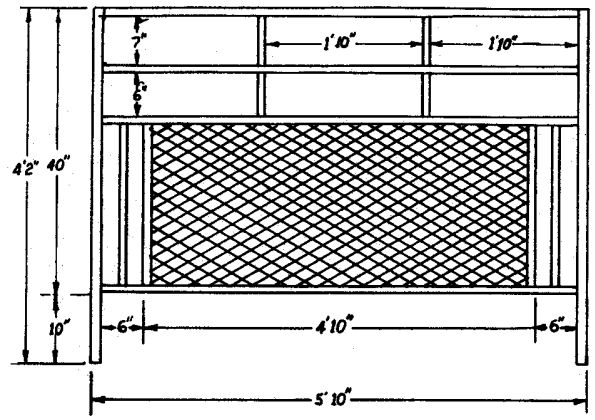

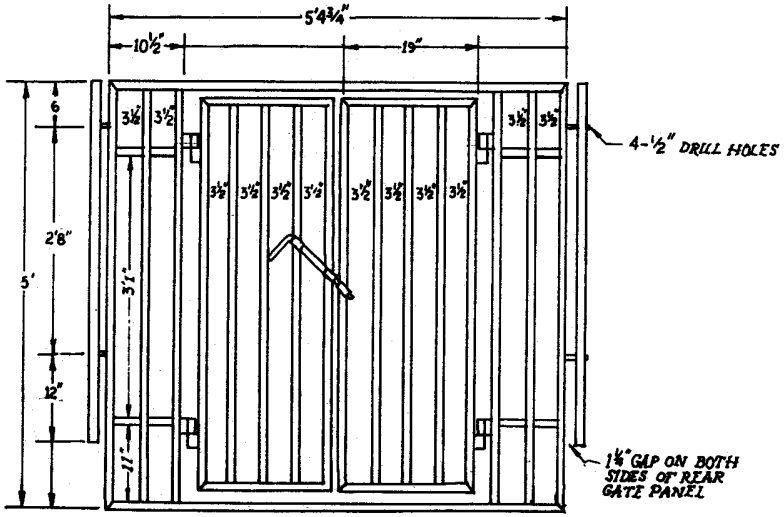

1" GAP BETWEEN GATES
1" GAP ON TOP OF GATES
2" GAP ON BOTTOM OF GATES
GATE LATCH ON 45° ANGLE

BACK

DWN BY: JOHN McEACHERN

Courtesy of Vinoss
Vocational Agriculture Department

Curriculum and Instructional Materials Center
State Department of Vocational and Technical Education
Stillwater, Oklahoma

Pickup Stock Racks

Scale: ¾" = 1'

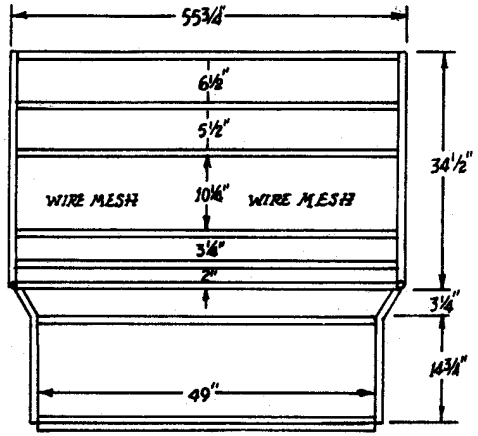

BILL OF MATERIAL:
4 SQUARE FEET OF EXPANSION STEEL
4 SQUARE FEET OF 18 GUAGE SHEETMETAL
8' OF 1" STRAP IRON
12-2½" ROUND HEAD STOVE BOLTS
24' OF 1"x6" FENCING LUMBER
7' OF ¼" PIPE
265' OF ¾" PIPE

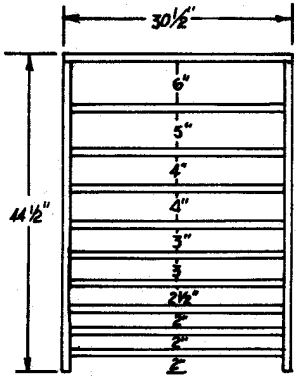

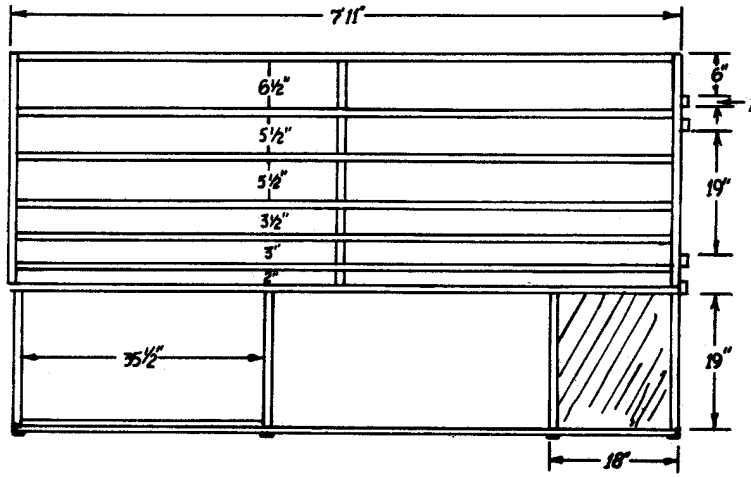

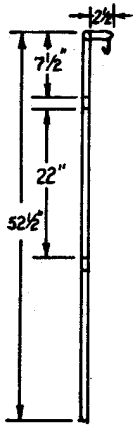

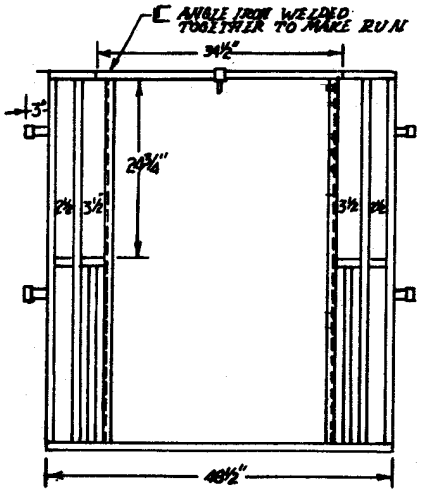

Courtesy of Guthrie
Vocational Agriculture Department

Curriculum and Instructional Materials Center
State Department of Vocational and Technical Education
Stillwater, Oklahoma

DRAWN BY: JOHN McEACHERN