Mineral Feeders

Scale: ¾" = 1'

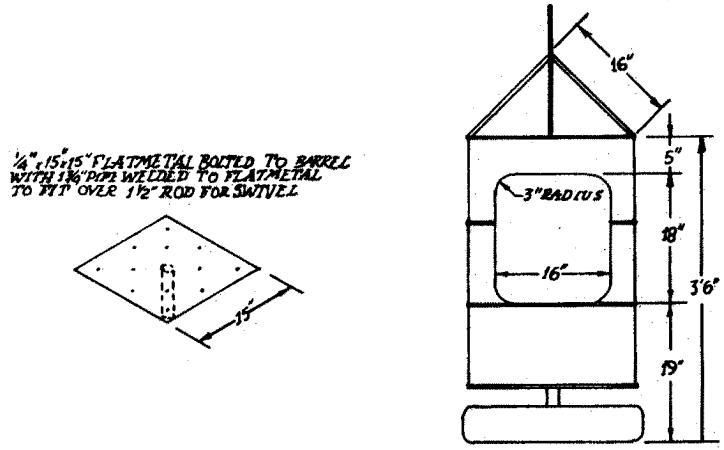

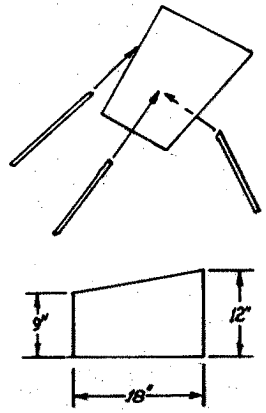

BILL OF MATERIAL
1-55 GAL BARREL
1 PIECE OF 1½" ROD APPROX. 5" LONG
1 PIECE OF 1¾" PIPE APPROX 4" LONG
1 WHEEL & TYRE CEMENTED
1 PIECE OF SHEETMETAL 18" x 12"
3 WEATHER VAIN BRACES 16" LONG
1 PIECE OF ¼" x 15" x 15" FLATMETAL

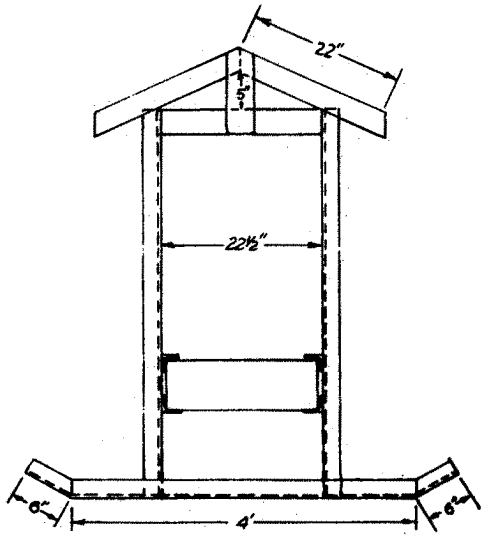

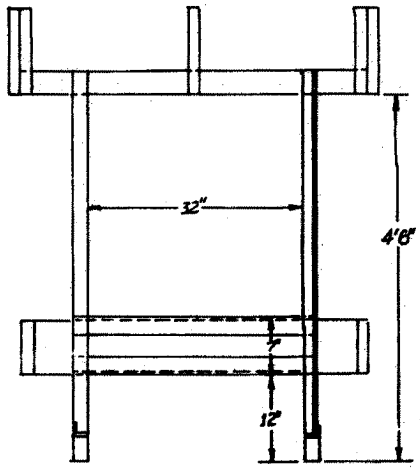

BILL OF MATERIAL
2 PIECES OF 2½" ANGLEIRON 5' LONG
4 PIECES OF 2½" ANGLEIRON 4'6" LONG
4 PIECES OF 2½" ANGLEIRON 32" LONG
4-2"x6" BOARDS 3'9" LONG
2-2"x6" BOARDS APPROX 22" LONG
2-2x4" BOARDS 4' LONG
2-2"x4" BOARDS 19½" LONG
6-2"x4" BOARDS 22" LONG
2-2"x4" BOARDS 12" LONG

Courtesy of Colgate
Vocational Agriculture Department

Curriculum and Instructional Materials Center
State Department of Vocational and Technical Education
Stillwater, Oklahoma

DWN BY: JOHN McEACHERN

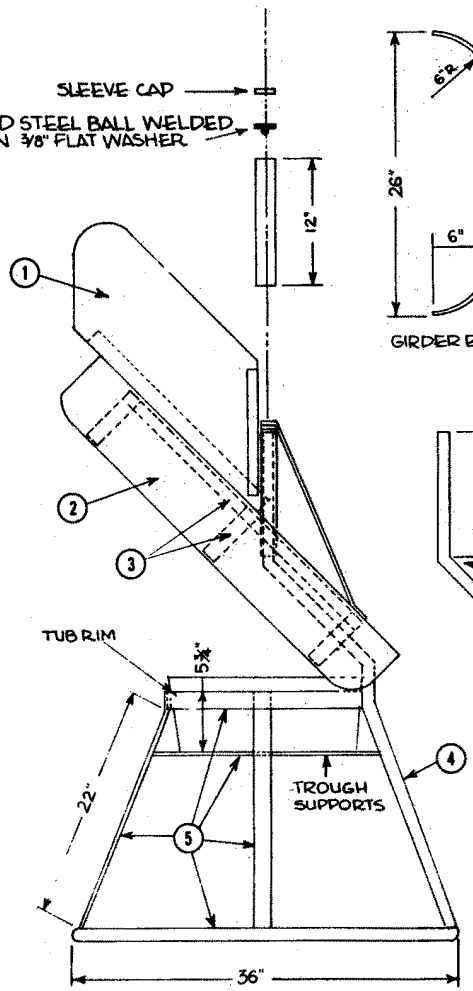

SIDE VIEW

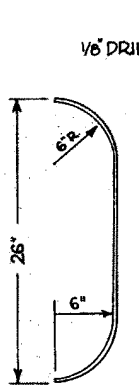

GIRDER BEND

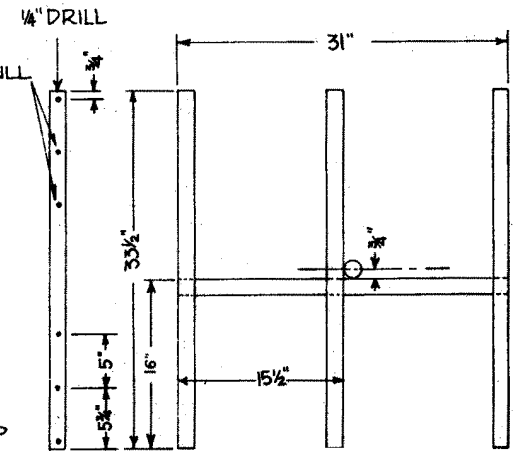

ROOF SUPPORT & GIRDER ASSEMBLY NO. 3

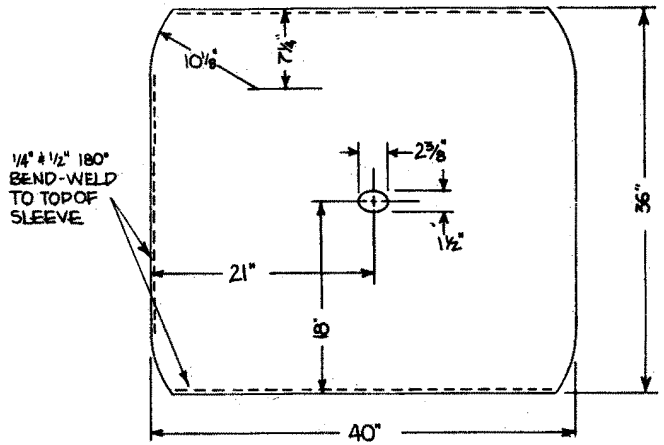

ROOF DETAIL NO. 2

BEND TO FIT GIRDER BEND.

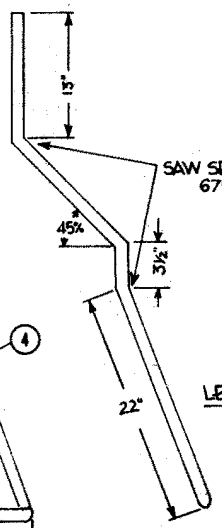

LEG & ROOF SUPPORT NO. 4

NOTE: USE LEVEL TO INSURE CENTERPOST PLUMB.

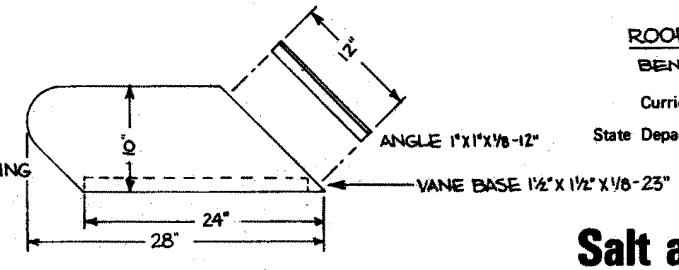

VANE & BASE NO. 1

NO. 5 - PIPE, ½" STRUCTURAL - 115" LONG - BEND TO 36" I.D. - TUB RIM, FLAT METAL ¼"x1½" - 58½" LONG, BEND COLD 18½" I.D - LEGS 3 FLAT ¼"x1½" - 22" LONG, WELD LEG & ROOF SUPPORT AND TROUGH SUPPORTS (2) ¼"x1½", MEASURE TO FIT.

Curriculum and Instructional Materials Center
State Department of Vocational and Technical Education
Stillwater, Oklahoma

Salt and Mineral Feeder

Scale: 3/32"=1"

BILL OF MATERIALS

- 1 - 1/2" Pipe 10' long
- 1 - 1" Pipe 5' long
- 1 - 1 1/4" Pipe 1' long
- 24' Flat metal 1/4" X 1 1/2"
- 3' Angle 1 1/2" X 1 1/2" X 3/16"
- 2' Angle 1 1/2" X 1 1/2" X 1/8"
- 1' Angle 1" X 1" X 1/8"
- 1 pc. Flat metal 1/4" X 1" - 2' long
- 1 pc. 22 ga. Galvanized sheet metal 36" X 40"
- 1 pc. 22 ga. Galvanized sheet metal 20". X 28"
- 1 - 3/8" Flat washer
- 1 - 1/2" Ball Bearing
- 12 - 1/4" X 1/2" Sheet metal bolts
- 12 - Pop rivets, 1/8" X 3/8"
- 1 - Rubber Tub, 50 lb. capacity
- 3 - 1/4" X 1" Sheet metal bolts

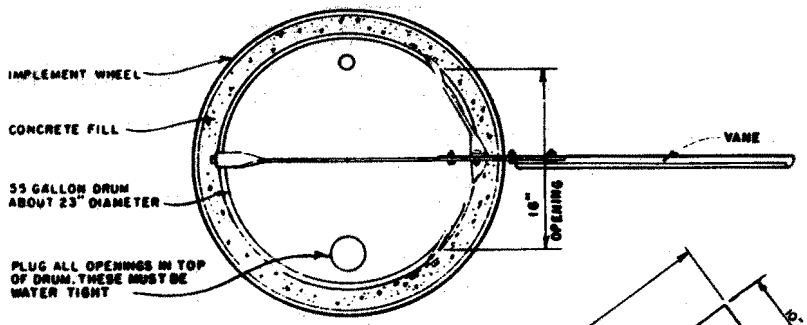

PLAN VIEW

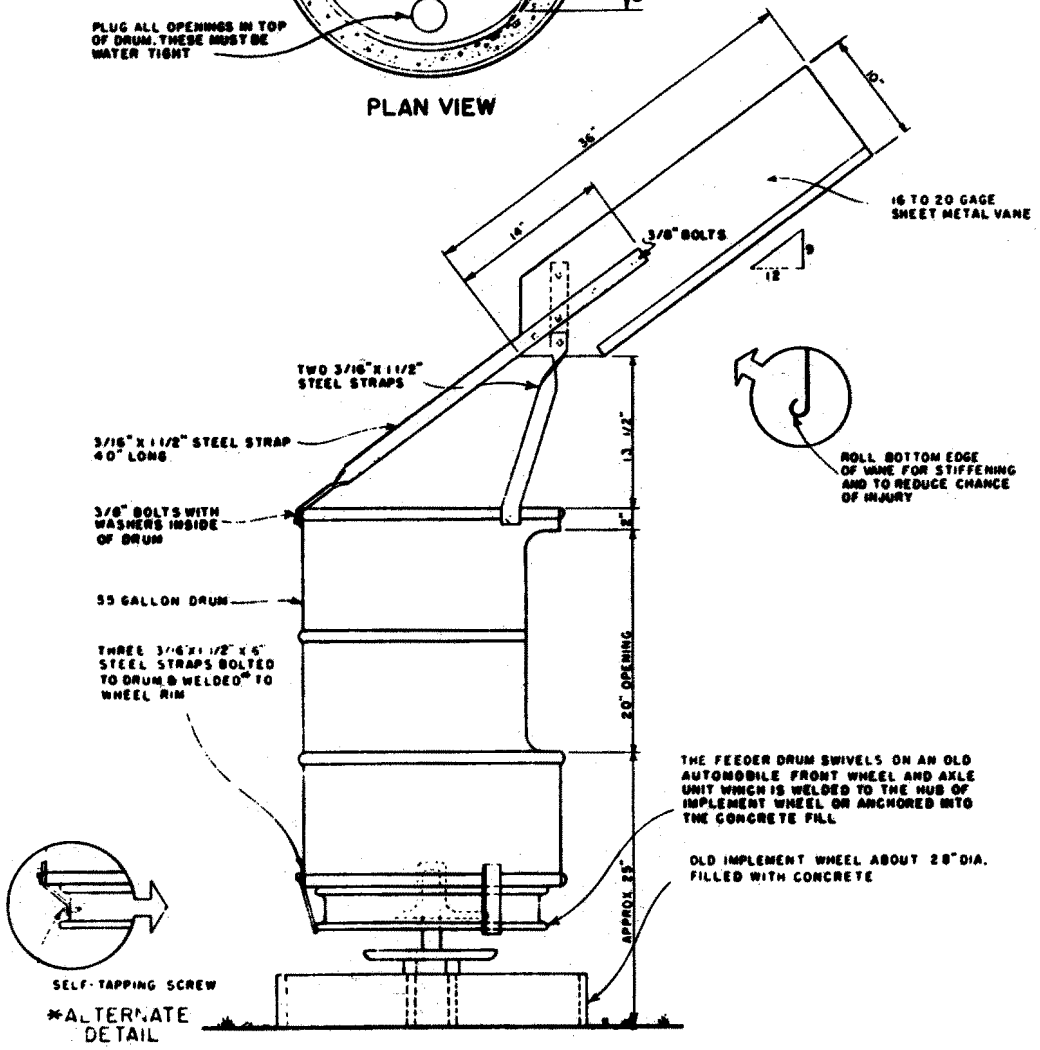

SIDE ELEVATION

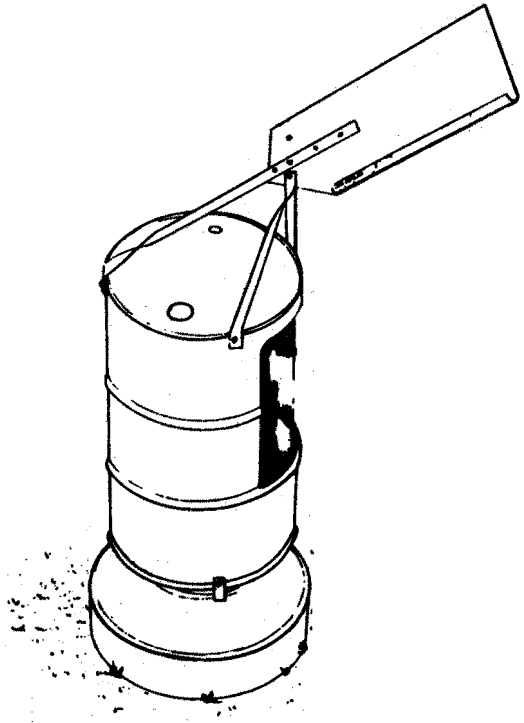

PERSPECTIVE VIEW

NOTE
FOR PROPER OPERATION, THE FEEDER SHOULD BE SET ON A LEVEL SURFACE.

PAINT OUTSIDE WITH ALUMINUM PAINT OR OTHER RUST-PREVENTIVE COATING.

COAT INSIDE OF DRUM WITH ASPHALT PAINT.

REMOVE BURRS FROM EDGES OF OPENING CUT IN DRUM.

9

COOPERATIVE EXTENSION WORK IN
AGRICULTURE AND HOME ECONOMICS

AND

U.S. DEPARTMENT OF AGRICULTURE COOPERATING

"WEATHERVANE" MINERAL FEEDER
FOR CATTLE

CALIF. '67	EX. 5844	SHEET 1 OF 1