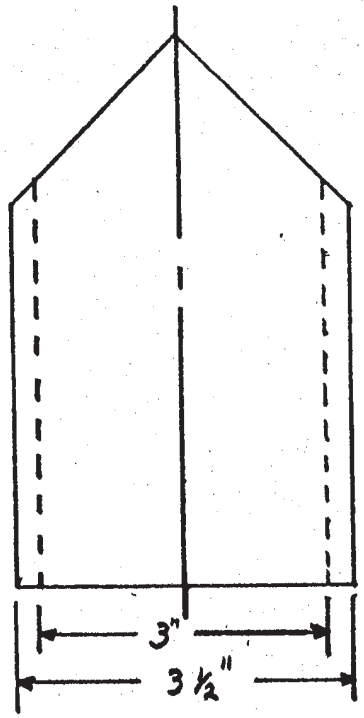

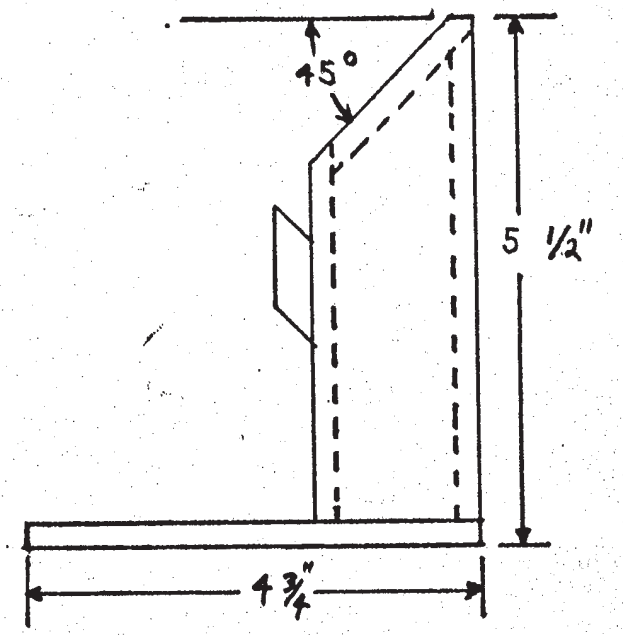

Note: Two book ends made by splitting a pipe, verticle beads arc-welded on pipe.

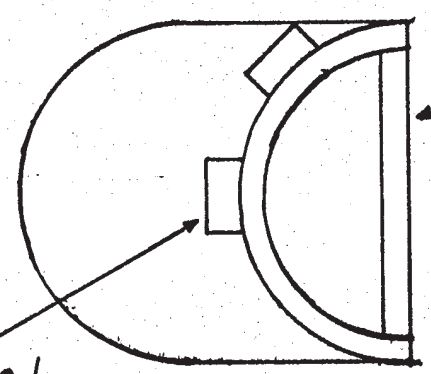

Base, top, and back 1/4" steel plate.

3/4" steel rod cut on 45° angle, welded to pipe.

UNIVERSITY OF IDAHO
AGRICULTURAL ENGINEERING
MOSCOW, IDAHO

BOOK ENDS

DRAWN BY D. H. BENNETT
DATE 4-27-71
SCALE 1/2" = 1"